Department of Alternative
Energy Development and Efficiency
MINISTRY OF ENERGY

KLONG LAM PLOK HYDROPOWER PROJECT

YAN TA KHAO DISTRICT TRANG PROVINCE

CONTRACT C1

CIVIL WORKS AND TRANSMISSION LINE

VOLUME 4

DRAWINGS

P&C MANAGEMENT CO.,LTD.

KLONG LAM PLOK HYDROPOWER PROJECT

CONTRACT C1 : LIST OF DRAWINGS

SHEET NO.	DRAWING NO.	DRAWING DETAILS
		GENERAL DRAWING
1	KLP-GN-01	PROJECT LOCATION MAP
2	KLP-GN-02	PROJECT LAY-OUT
3	KLP-GN-03	SYMBOLS, ABBREVIATIONS, AND GENERAL NOTES
4	KLP-GN-04	PROJECT INFORMATION HYDROLOGY DATA
5	KLP-GN-05	POWER WATERWAY HYDRAULIC ARRANGEMENT
6	KLP-GN-06	GEOLOGICAL, PLAN
7	KLP-GN-07	GEOLOGICAL, PROFILE (SHEET 1/3)
8	KLP-GN-08	GEOLOGICAL, PROFILE (SHEET 2/3)
9	KLP-GN-09	GEOLOGICAL, PROFILE (SHEET 3/3)
		WEIR
10	KLP-WE-01	WEIR : WEIR REHABILITATION GENERAL LAY-OUT
11	KLP-WE-02	WEIR : WEIR REHABILITATION SECTION AND DETAILS
12	KLP-WE-03	WEIR : WEIR REHABILITATION SERVICE BRIDGE
13	KLP-WE-04	WEIR : INTAKE STRUCTURE PLAN AND SECTIONS
14	KLP-WE-05	WEIR : INTAKE STRUCTURE SECTIONS
15	KLP-WE-06	WEIR : INTAKE STRUCTURE REINFORCEMENT DETAILS (SHEET 1/2)
16	KLP-WE-07	WEIR : INTAKE STRUCTURE REINFORCEMENT DETAILS (SHEET 2/2)
17	KLP-WE-08	WEIR : INTAKE STRUCTURE MISCELLANEOUS DETAILS
18	KLP-WE-09	WEIR : INTAKE STRUCTURE 1.50x1.50 m. VERTICAL GATE (GATE INSTALLATION)
19	KLP-WE-10	WEIR : INTAKE STRUCTURE 1.50x1.50 m. VERTICAL GATE (GATE DATAIL)
20	KLP-WE-11	WEIR : INTAKE STRUCTURE DIA. 1.50 m. VERTICAL GATE
21	KLP-WE-12	WEIR : INTAKE STRUCTURE PEDESTAL SCREW LIFT CAPACITY 6.5 TONS
22	KLP-WE-13	WEIR : INTAKE STRUCTURE GATE-LIFT PEDESTALS
23	KLP-WE-14	WEIR : INTAKE STRUCTURE VERTICAL SCREW-LIFT CAPACITY 2,250 KG.
		HEADRACE
24	KLP-HR-01	PLAN OF DEMOLITION WORK, STA. 0+000 TO STA. 1+000
25	KLP-HR-02	PLAN OF DEMOLITION WORK, STA. 1+000 TO STA. 1+459.506
26	KLP-HR-03	PLAN AND PROFILE, STA. 0+000 TO STA. 0+500
27	KLP-HR-04	PLAN AND PROFILE, STA. 0+500 TO STA. 1+000
28	KLP-HR-05	PLAN AND PROFILE, STA. 1+000 TO STA. 1+459.506
29	KLP-HR-06	TYPICAL SECTIONS AND DETAILS
30	KLP-HR-07	STEEL PIPE AND JOINT DETAILS
31	KLP-HR-08	CONCRETE PIER SECTION AND DETAILS
32	KLP-HR-09	FITTINGS FOR STEEL PIPE
33	KLP-HR-10	ROAD CROSSING, STA 0+252.50 PLAN
34	KLP-HR-11	ROAD CROSSING, STA 0+252.50 SECTIONS
35	KLP-HR-12	ROAD CROSSING, STA 1+173.758 PLAN AND SECTIONS
36	KLP-HR-13	DRAIN CULVERT, STA. 0+108.180 PLAN AND SECTION
37	KLP-HR-14	DRAIN CULVERT, STA. 0+191.773 PLAN AND SECTION
38	KLP-HR-15	DRAIN CULVERT, STA. 0+505.861 PLAN AND SECTION
39	KLP-HR-16	DRAIN CULVERT STA. 0+647.684 , PLAN AND SECTION
40	KLP-HR-17	DRAIN CULVERT STA. 0+830.169 , PLAN AND SECTION
41	KLP-HR-18	DRAIN CULVERT STA. 1+026.360 , PLAN AND SECTION
42	KLP-HR-19	DRAIN CULVERT STA. 1+150.523 , PLAN AND SECTION
43	KLP-HR-20	DRAIN CULVERT STA. 1+381.985 , PLAN AND SECTION
44	KLP-HR-21	DRAIN CULVERT DETAILS OF REINFORCEMENT SHEETS 1 OF 2
45	KLP-HR-22	DRAIN CULVERT DETAILS OF REINFORCEMENT SHEETS 2 OF 2
		O&M ROAD
46	KLP-OM-01	PLAN AND PROFILE, STA. 0+000 TO STA. 0+107.621
47	KLP-OM-02	TYPICAL SECTIONS
		SURGE TANK
48	KLP-ST-01	GENERAL LAY-OUT
49	KLP-ST-02	SECTIONS
50	KLP-ST-03	LADDER RUNG DETAILS 1
51	KLP-ST-04	LADDER RUNG DETAILS 2
52	KLP-ST-05	RING GRIDER AND RAILING FALL DETAILS
53	KLP-ST-06	REINFORCEMENT DETAILS
54	KLP-ST-07	EMERGENCY VALVE CHAMBER PLAN SECTIONS AND DETAILS
55	KLP-ST-08	EMERGENCY VALVE CHAMBER REINFORCEMENT DETAILS
56	KLP-ST-09	SEDIMENT VALVE CHAMBER PLAN SECTIONS AND DETAILS

SHEET NO.	DRAWING NO.	DRAWING DETAILS
57	KLP-ST-10	SEDIMENT VALVE CHAMBER REINFORCEMENT DETAILS
58	KLP-ST-11	SEDIMENT OUTLET PLAN SECTION AND DETAILS
		PENSTOCK
59	KLP-PS-01	PLAN AND PROFILE, STA. 0+000 TO STA. 0+500
60	KLP-PS-02	PLAN AND PROFILE, STA. 0+500 TO STA. 0+693.571
61	KLP-PS-03	THRUST BLOCK PLAN ,SECTIONS REINFORCEMENT DETAILS 1/5
62	KLP-PS-04	THRUST BLOCK PLAN ,SECTIONS REINFORCEMENT DETAILS 2/5
63	KLP-PS-05	THRUST BLOCK PLAN ,SECTIONS REINFORCEMENT DETAILS 3/5
64	KLP-PS-06	THRUST BLOCK PLAN ,SECTIONS REINFORCEMENT DETAILS 4/5
65	KLP-PS-07	THRUST BLOCK PLAN ,SECTIONS REINFORCEMENT DETAILS 5/5
66	KLP-PS-08	PIPE SUPPORT SECTIONS AND DETAILS
67	KLP-PS-09	WYE, PLAN, SECTIONS AND DETAILS AT STA.0+516.909
68	KLP-PS-10	WYE, PLAN, SECTIONS AND DETAILS AT STA.0+678.000
69	KLP-PS-11	EXPANSION JOINT, PLAN, SECTIONS AND DETAILS
70	KLP-PS-12	BEND DETAILS
71	KLP-PS-13	WELDING DETAILS
72	KLP-PS-14	ROAD CROSSING STA 0+356.385 PLAN, SECTIONS REINFORCEMENT
		POWER HOUSE
73	KLP-PH-01	GENERAL LAY-OUT
74	KLP-PH-02	PLAN 1st FLOOR
75	KLP-PH-03	PLAN 2st AND ROOF PLAN
76	KLP-PH-04	ELEVATIONS
77	KLP-PH-05	SECTIONS (SHEET 1/2)
78	KLP-PH-06	SECTIONS (SHEET 2/2)
79	KLP-PH-07	DETAILS OF TOILET, AND BUCKET TREATS
80	KLP-PH-08	DETAIL OF DOORS, WINDOWS AND NAME PLATE
81	KLP-PH-09	PLAN OF FOOTING AND DETAILS
82	KLP-PH-10	PLAN OF SLAB AND DETAILS (1/2)
83	KLP-PH-11	PLAN OF SLAB AND DETAILS (2/2)
84	KLP-PH-12	BEAMS DETAILS
85	KLP-PH-13	BEAMS DETAILS AND STEEL STAIR
86	KLP-PH-14	COLUMN BRACKET AND STAIR DETAILS
87	KLP-PH-15	ROOF BEAM AND TRUSS PLANS
88	KLP-PH-16	TRUSS DETAIL (1/2)
89	KLP-PH-17	TRUSS DETAIL (2/2)
90	KLP-PH-18	DITCH AND MANHOLE DETAILS
91	KLP-PH-19	CABLE TRENCH DETAILS
92	KLP-PH-20	ELECTRIC AND LIGHTING SYSTEMS (SHEET 1/4)
93	KLP-PH-21	ELECTRIC AND LIGHTING SYSTEMS (SHEET 2/4)
94	KLP-PH-22	ELECTRIC AND LIGHTING SYSTEMS (SHEET 3/4)
95	KLP-PH-23	ELECTRIC AND LIGHTING SYSTEMS (SHEET 4/4)
96	KLP-PH-24	GROUNDING SYSTEMS
		TAILRACE
97	KLP-TR-01	GENERAL LAY-OUT
98	KLP-TR-02	SECTIONS AND DETAILS
99	KLP-TR-03	REINFORCEMENT DETAILS
100	KLP-TR-04	1.25x1.25 m. VERTICAL GATE GATE INSTALLATION
101	KLP-TR-05	1.25x1.25 m. VERTICAL GATE GATE DETAIL
		TRANSMISSION LINE
102	KLP-TS-01	GENERAL PLAN
103	KLP-TS-02	PLAN AND PROFILE, STA. 0+000 TO STA. 0+600
104	KLP-TS-03	PLAN AND PROFILE, STA. 0+600 TO STA. 1+200
105	KLP-TS-04	PLAN AND PROFILE, STA. 1+200 TO STA. 1+366
106	KLP-TS-05	POLE TYPE "A" AND "B"
107	KLP-TS-06	POLE TYPE "C" AND "D"
108	KLP-TS-07	POLE TYPE "E"
109	KLP-TS-08	POLE TYPE "F" AND "G"
110	KLP-TS-09	TYPE OF ANCHOR GUY

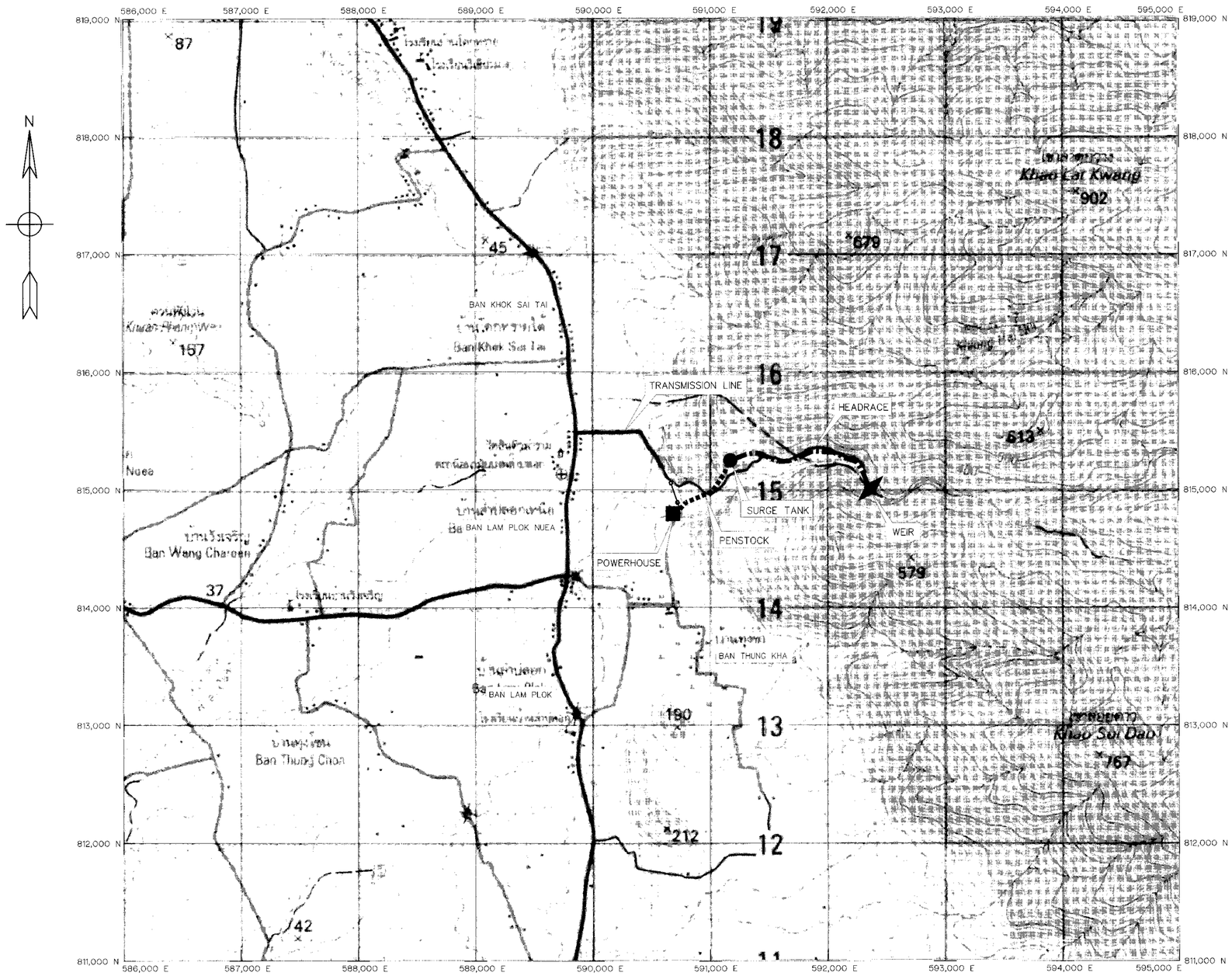

PROJECT AREA MAP

SCALE 1:20,000

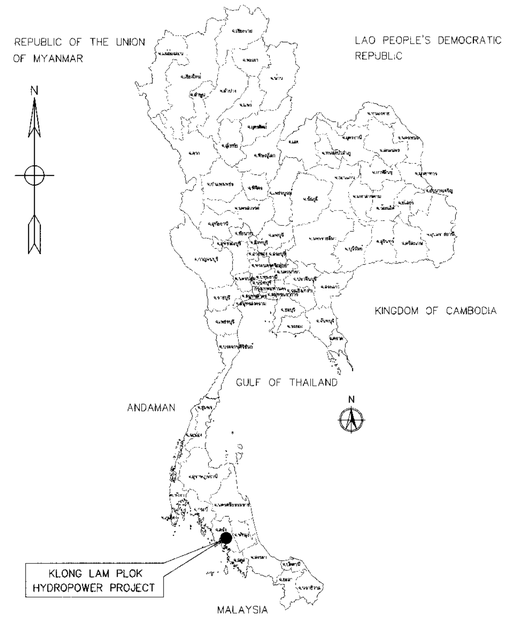

LOCATION MAP

NOT TO SCALE

LEGENDS :

- STREAM
- WEIR
- HEADRACE
- SURGE TANK
- PENSTOCK
- POWERHOUSE
- ACCESS ROAD
- TRANSMISSION LINE

NOTES :

1. ALL DIMENSIONS AND ELEVATIONS (M.S.L.) ARE IN METERS, UNLESS OTHERWISE SHOWN
2. SYMBOLS, ABBREVIATIONS AND GENERAL NOTES SEE DWG. NO. KLP-GN-03

0 500 1,000 1,500

SCALE 1:20,000 METERS

NO.	DATE	REVISIONS	CHECKED	APPROVED
3				
2				
1				

CONSULTANTS DEDE

KINGDOM OF THAILAND
Department of Alternative Energy Development and Efficiency
MINISTRY OF ENERGY

KLONG LAM PLOK HYDROPOWER PROJECT

CIVIL WORKS AND TRANSMISSION LINE
GENERAL DRAWING
PROJECT LOCATION MAP

P&C MANAGEMENT CO., LTD.

Department of Alternative Energy Development and Efficiency
MINISTRY OF ENERGY

DESIGNED	AVL29074	RE.6229	REVIEWED
DRAWN			SUBMITTED
CHECKED		RE.6229	RECOMMENDED
			APPROVED
PROJECT MANAGER	08/03/2559 DATE	DRAWING NO. KLP-GN-01	SHEET NO. 1 OF 110

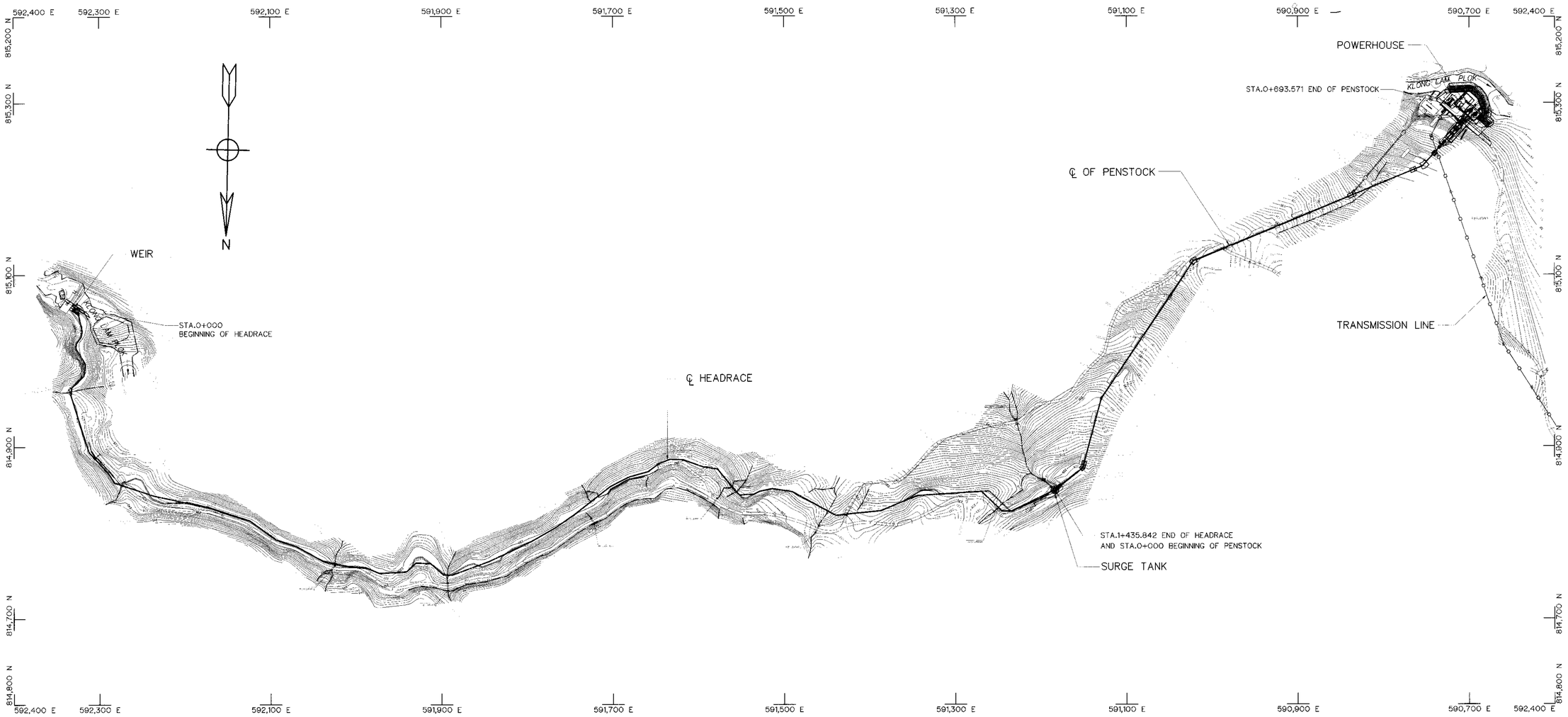

PROJECT LAYOUT

SCALE 1:2,500

NOTES :

1. ALL DIMENSIONS AND ELEVATIONS (M.S.L.) ARE IN METERS. UNLESS OTHERWISE SHOWN.
2. SYMBOLS, ABBREVIATIONS AND GENERAL NOTES SEE DWG. NO. KLP-GN-03

0 50 100 150 200

SCALE 1:2,500 METERS

NO.	DATE	REVISIONS	CHECKED	APPROVED
3				
2				
1				
	CONSULTANTS		DEDE	

KINGDOM OF THAILAND
Department of Alternative Energy Development and Efficiency
MINISTRY OF ENERGY

KLONG LAM PLOK HYDROPOWER PROJECT

CIVIL WORKS AND TRANSMISSION LINE
GENERAL DRAWING
PROJECT LAY-OUT

P&C MANAGEMENT CO.,LTD.

Department of Alternative Energy Development and Efficiency
MINISTRY OF ENERGY

DESIGNED	สธ.29074	สธ.6226	REVIEWED
DRAWN			SUBMITTED
CHECKED		สธ.6226	RECOMMENDED
PROJECT MANAGER	08/03/2559 DATE		APPROVED

DRAWING NO.	SHEET NO.
KLP-GN-02	2 OF 110

ABBREVIATIONS :

A	CROSS-SECTION AREA OF FLOW	MAX.	MAXIMUM
AC.	ASBESTOS CEMENT PIPE	M.S.L.	MEAN SEA LEVEL
AGG.	AGGREGATE	MISC.	MISCELLANEOUS
ALT.	ALTERNATIVE	N.	NORTH
APPROX.	APPROXIMATE	n.	MANNING'S ROUGHINESS COEFFICIENT
AZ.	AZIMUTH	N.F.	NEAR FACE
B.	BEGINNING OF SURVEY	NGL.	NATURAL GROUND LEVEL
BC.	BEGINNING OF CURVE	NO. OR #	NUMBER
BEG.	BEGINNING	N.W.L.	NORMAL WATER LEVEL
BF.	BOTTOM FACE	OD.	OUTSIDE DIAMETER
B	BEAM	O.F.	OUTSIDE FACE
B.M.	BENCH MARK	O&M	OPERATION & MAINTENANCE
BOTT.	BOTTOM	PC.	POINT OF HONRIZONTAL CURVATURE
BRG.	BEARING	PI.	POINT OF HORIZONTAL INTERSECTION
C.B.R.	CALIFORNIA BEARING RATIO	PL.	PLATE
C/C	CENTER TO CENTER	P.O.C.	POINT ON CURVE
℄	CENTER LINE	P.O.T.	POINT ON TANGENT
CL.	CLEARANCE	P.O.S.T.	POINT ON SUB-TANGENT
CM. OR cm.	CENTIMETER	PRC.	POINT OF HORIZONTAL REVERSE CURVE
CM./S OR cm./s	CENTIMETER PER SECOND	PT.	POINT OF TANGENT
COL.	COLUMN	PVC.	POLYVINYL CHLORIDE
CONC.	CONCRETE	PVC.	POINT OF VERTICAL CURVATURE
D	DEGREE OF CURVE	PVI.	POINT OF VERTICAL INTERSECTION
DB.	DEFORM BAR	PVRC.	POINT OF VERTICAL REVERSE CURVE
d.	DEPTH OF WATER	PVT.	POINT OF VERTICAL TANGENT
DIA. OR Ø	DIAMETER	Q.	DISCHARGE
DOH.	DEPARTMENT OF HIGHWAY	QTY. QUAN.	QUANTITY
DWG.	DRAWING	R	RADIUS OF CURVATURE
DEDE.	DEPARTMENT OF ALTERNATIVE ENERGY	r	HYDRAULIC RADIUS
	DEVELOPMENT AND EFFICIENCY	RØ , Ø	ROUND BAR
E	EAST	RC.	REINFORCED CONCRETE
E	END OF SURVEY	RD.	ROAD
EA.	EACH	REF.	REFERENCE
E.C.	END OF CURVE	REINF.	REINFORCEMENT
E.F.	END OF FACE	REQ'D	REQUIRED
EL. OR ELEV.	ELEVATION	RID.	ROYAL IRRIGATION DEPARTMENT
EXIST.	EXISTING	SCH.	SCHEDULE
EXP.	EXPANSION	SE.	SUPERELEVATION
EXT.	EXTERIOR	SETC.	SECTION
EX.	EXTERNAL DISTANCE OF CURVE	S.P.C.T.	STANDARD PROCTOR COMPACTION TEST
f	FREE BOARD , FINISH	S.S.	SIDE SLOPE
F.F.	FAR FACE	STIR.	STIRRUP
F.S.L.	FULL SUPPLY LEVEL	STA.	STATION
FTG.	FOOTING	STD.	STANDARD
HD.	HEAD	STR.	STRUCTURE
HEX.	HEXAGONAL	SYMM.	SYMMETRICAL
HOR.	HORIZONTAL	T.	TANGENT LENGTH , THICKNESS
I.D.	INSIDE DIAMETER	T	TON
I.F.	INSIDE FACE	THK.	THICKNESS
IN. OR "	INCH	T.F.	TOP FACE
INT.	INTERIOR	T.I.S.	THAI INDUSTRIAL STANDARD
INV.	INVERT	Ts.	SUPERELEVATION TRANSITION LENGTH
Kg.	KILOGRAM	TYP.	TYPICAL
Km.	KILOMETER	V.	VELOCITY OF FLOW
KPH.	KILOMETER PER HOUR	V.C.	VERTICAL CURVE
KSC.	KILOGRAM PER SQUARE CENTIMETER	Vc.	LENGTH OF VERTICAL CURVE
L	LENGTH OF CURVE	VER.	VERTICAL
LC.	LENGTH OF HORIZONTAL CURVE	VOL.	VOLUME
LONG.	LONGITUDINAL	W/	WITH
LT.	LEFT	W.C.	WATER CLOSET
L.W.L.	LOW WATER LEVEL	⊙	ANGLE
M. OR m.	METER	△	DEFLECTION ANGLE
$M.^2$ OR $m.^2$	SQUARE METER		
$M.^3$ OR $m.^3$	CUBIC METER		
MM. OR mm.	MILLIMETER		
M./S OR m./s	METER PER SECOND		
MIN.	MINIMUM		

SYMBOLS :

- TYPICAL NORTH ARROW
- CENTER LINE
- PAVED ROAD
- DIRT ROAD, LATEITE ROAD OR TRACK
- VILLAGE
- CITY OR DISTRICT
- POND OR SWAMP
- CULVERT UNDER ROAD
- BRIDGE
- POLE
- TEST PIT
- HAND AUGER
- EXISTING DRILL HOLES
- DRILL HOLES
- DEGREE, MINUTE, SECOND
- AT EQUAL DISTANCE BETWEEN CENTER TO CENTER
- B.M.
- KM.1+000 — STATION
- BC., EC., PC., PI., PT., PCV., PVT.
- WATER LEVEL
- PLAN OF RIPRAP
- PLAN OF SLOPE RIPRAP
- SECTION OF DUMPED RIPRAP
- SECTION OF HAND PLACED RIPRAP
- SECTION OF SAND
- SECTION OF GRAVEL OR COARSE AGGREGATE
- SECTION OF ROCK
- SECTION OF EARTH
- SECTION OF BACKFILL
- SECTION OF CONCRETE
- STEEL SECTION
- ELEVATION OR PLAN OF EARTH CUT OR FILL
- ELEVATION OR PLAN OF ROCK CUT
- ELEVATION OR PLAN OF SLOPE (1:5, 1:5)
- NATURAL GROUND LEVEL
- 25.00 — CONTOUR LINE
- RIVER, STREAM OR NATURAL DRAIN
- FLOW — FLOW DIRECTION
- 1:5 — SLOPE DIRECTION
- 2 / 1 — SLOPE RATIO

GENERAL NOTES :

1. ALL DIMENSIONS AND ELEVATIONS (M.S.L.) ARE IN METERS UNLESS OTHERWISE SHOWN.
2. DURING THE CONTRUCTION PERIOD, IT IS THE CONTRACTOR'S DUTY TO CHECK THE CORRECTION OF ALL RELEVANT LOCATIONS, DIMENSIONS, ELEVATIONS AND OTHER DATA AS PROVIDED BY THE DRAWING AND TECHNICAL SPECIFICATIONS BEFORE THE IMPLEMENTATION OF THE WORKS.
3. IN CASE OF ANY DETAILS BEING NOT MENTIONED OR NOT SHOWN IN THE DRAWING OR TECHNICAL SPECIFICATIONS, OR IN CASE OF ANY DISCREPANCY, DEFECTIVE DESCRIPTION, ERROR, DIMENSION OR AMBIGUTY BETWEEN OR IN ANY OF THE DRAWINGS, IT IS THE CONTRACTOR'S RESPONSIBILITY TO CORRECT AND/OR ADJUST THE RELEVENT DRAWINGS TO OBTAIN FIELD ENGINEER APPROVAL
4. ADDITIONAL SYMBOLS, IF REQUIRED, ARE DEFINED IN THE RESPECTIVE DRAWINGS.
5. THE SPECIFICATIONS AND THE QUANTITIES OF MATERIALS ARE SPECIFIED IN THE TECHNICAL SPECIFICATIONS.
6. ALL PLAIN CONCRETE CORNERS ARE TO BE CHEMFERED 2 cm. UNLESS OTHERWISE SHOWN.

STRUCTURAL DESIGN NOTES :

1. THE ULTIMATE COMPRESSIVE STRENGTH OF CONCRETE OF STANDARD CYLINDER (Ø0.15x0.30 m.) TEST AT AGE 28 DAYS SHALL BE AS THE FOLLOWING, UNLESS OTHERWISE SHOWN.

fc' (ksc)	DESCRIPTION
350	PRESTRESS CONCRETE
210	1. WEIR
	2. SURGE TANK
	3. POWERHOUSE
	4. TAILRACE
	5. MANHOLE
	6. ANCHOR BLOCK, PIPE SUPPORT
	7. HEADRACE
	8. BOX CULVERT
140	LEAN CONCRETE

2. UNLESS OTHERWISE SHOWN, THE FOLLOWING CLEAR COVER OF CONCRETE OVER OF THE REINFORCEMENT SHALL BE USED :
   - FACE EXPOSED TO SCOUR 5.0 cm.
   - FACE EXPOSED TO EARTH OR WEATHER 5.0 cm.
   - FACE UNEXPOSED TO EARTH OR WEATHER 3.0 cm.
3. THE REINFORCEMENT LAP SPLICES SHALL NOT BE LESS THAN 50 DIAMETERS OF BIGGER THAN BAR WITH HOOKS, UNLESS OTHERWISE SHOWN.
4. EMBEDDED METALWORK SHALL BE SECURELY FASTENED IN POSITION BEFORE PLACING CONCRETE.
5. ALL CONSTRUCTION JOINT SHOULD BE TREATED AS DIRECTED IN ORDER TO ASSURE THE BEST BOND.
6. A 5 cm. (MIN.) LAYER OF LEAN CONCRETE (1:3:5 BY VOLUME) SHOULD BE PLACED BELOW CONCRETE STRUCTURES.
7. THE STRUCTURES SHOULD BE PLACED ON UNDISTURBED SOILS OR COMPACTED FILL AND BACKFILL AROUND THE STRUCTURES SHOULD BE COMPACTED.
8. THE FOUNDATION ELEVATIONS ARE SUBJECT TO CHANGE AS DIRECTED ACCORDING TO THE SOIL CONDITIONS.
9. ALL SIZES OF REINFORCING BARS AND STRUCTURAL STEELS ARE IN MILLIMETERS.
10. ALL STRUCTURAL STEELS ARE THOSE OF T.I.S. DESIGNATION Fe24.
11. REINFORCED STEEL BARS SHALL BE CONFORM TO T.I.S. AS FOLLOW :
    - DEFORMED BARS (SD30) – T.I.S. 24-2548
    - ROUND BARS (SR24) – T.I.S. 20-2543
12. ALLOWABLE BEARING CAPACITY OF FOUNDATION SHALL NOT BE LESS THAN AS FOLLOW :
    - INTAKE Q_a = 15 $T/M.^2$
    - HEADRACE Q_a = 15 $T/M.^2$
    - SURGE TANK Q_a = 20 $T/M.^2$
    - POWERHOUSE Q_a = 20 $T/M.^2$
    - PENSTOCK Q_a = 20 $T/M.^2$

NO.	DATE	REVISIONS	CHECKED	APPROVED
3				
2				
1				

CONSULTANTS | DEDE

KINGDOM OF THAILAND
Department of Alternative Energy Development and Efficiency
MINISTRY OF ENERGY

KLONG LAM PLOK HYDROPOWER PROJECT

CIVIL WORKS AND TRANSMISSION LINE
GENERAL DRAWING
SYMBOLS, ABBREVIATIONS, AND GENERAL NOTES

P&C MANAGEMENT CO.,LTD.

Department of Alternative Energy Development and Efficiency
MINISTRY OF ENERGY

DESIGNED	สิริ.29074 สิริ.6226	REVIEWED	
DRAWN		SUBMITTED	
CHECKED	สิริ.6226	RECOMMENDED	
PROJECT MANAGER	08/03/2559 DATE	APPROVED	
DRAWING NO.	KLP-GN-03	SHEET NO.	3 OF 110

FIGURE 1 RELATIONSHIP BETWEEN MEAN ANNUAL RUNOFF AND CATCHMENT AREA

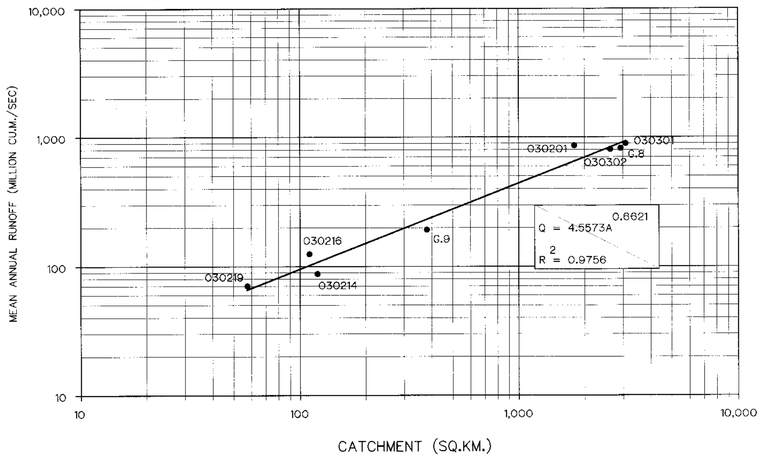

FIGURE 2 RELATIONSHIP BETWEEN ELEVATION AND DISCHARGE AT POWERHOUSE

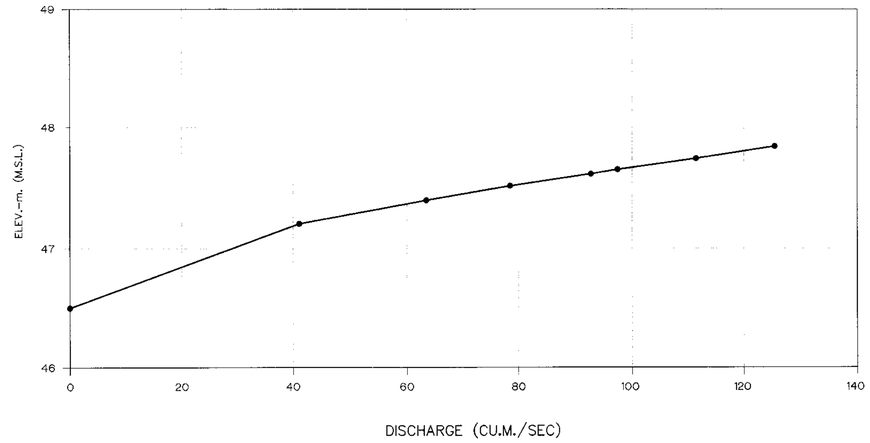

FIGURE 3 RELATIONSHIP BETWEEN ELEVATION AND DISCHARGE AT WEIR

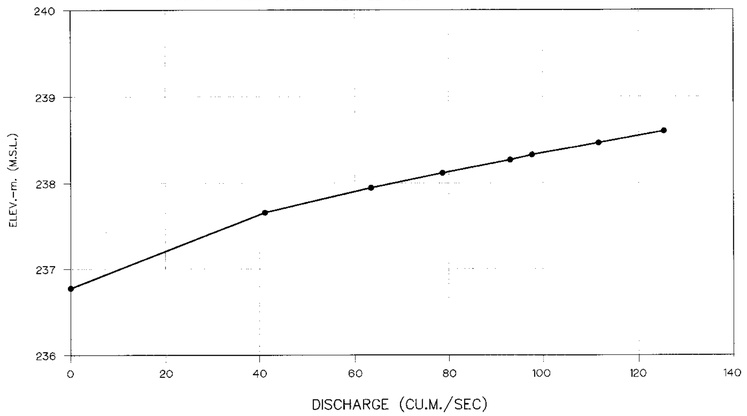

FIGURE 4 FLOW DURATION CURVE

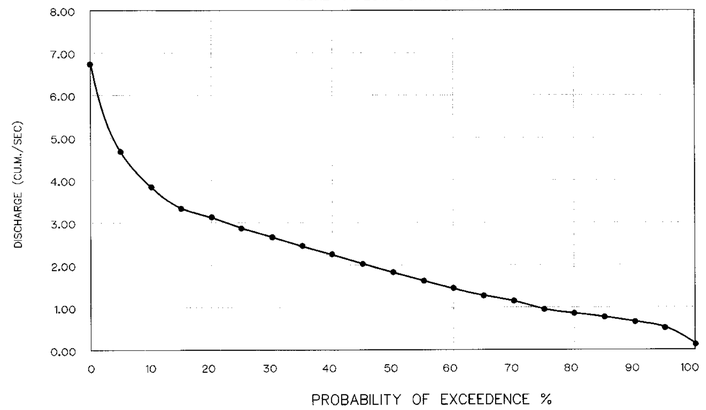

NO.	DATE	REVISIONS	CHECKED	APPROVED
3				
2				
1				
	CONSULTANTS		DEDE	

KINGDOM OF THAILAND
Department of Alternative Energy Development and Efficiency
MINISTRY OF ENERGY

KLONG LAM PLOK HYDROPOWER PROJECT

CIVIL WORKS AND TRANSMISSION LINE
GENERAL DRAWING
PROJECT INFORMATION HYDROLOGY DATA

P&C MANAGEMENT CO.,LTD.

Department of Alternative Energy Development and Efficiency
MINISTRY OF ENERGY

DESIGNED	สิน.29074	สิน.6226
DRAWN		
CHECKED		สิน.6226
PROJECT MANAGER	08/03/2559 DATE	

REVIEWED
SUBMITTED
RECOMMENDED
APPROVED

DRAWING NO. KLP-GN-04

SHEET NO. 4 OF 110

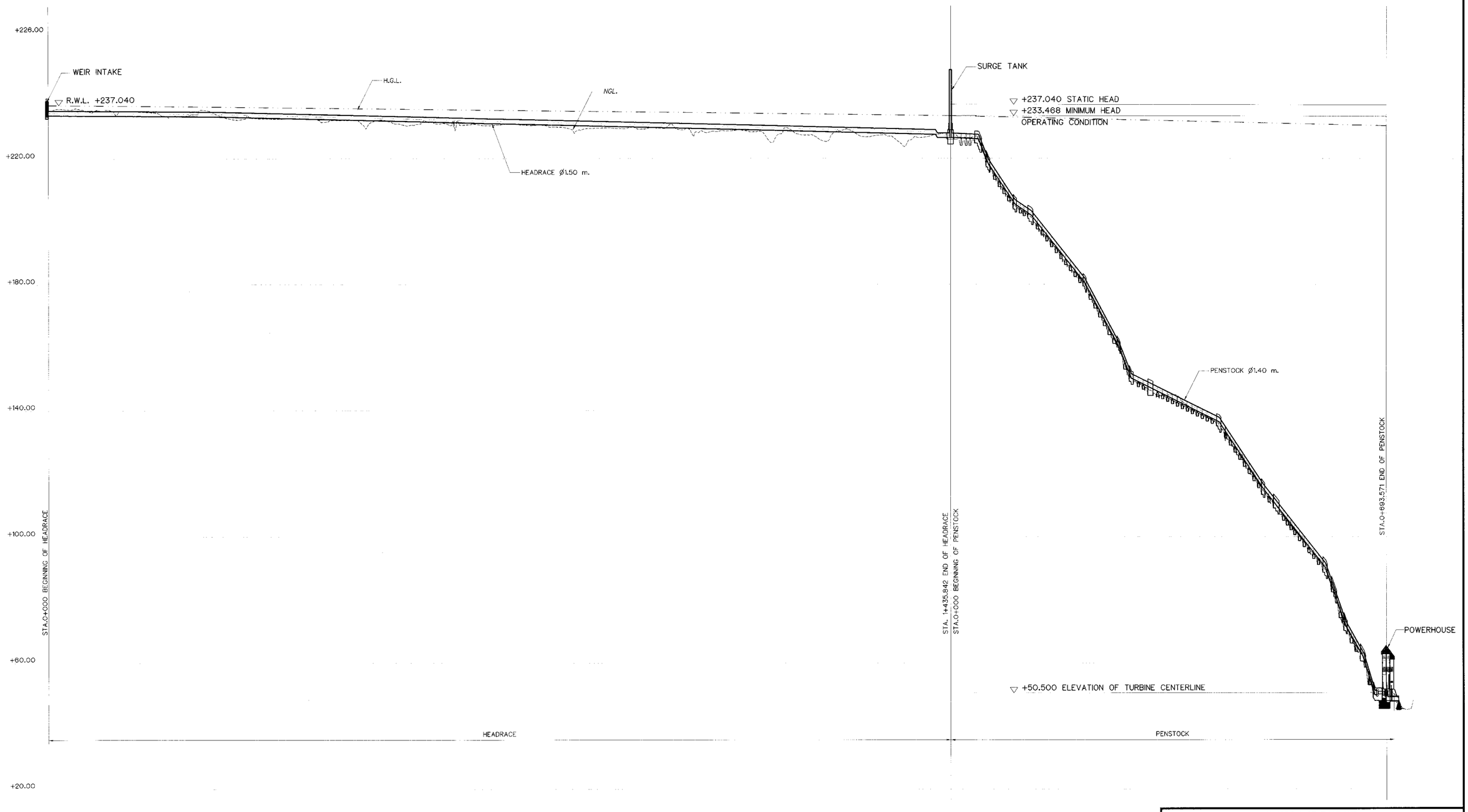

PROFILE ALONG HEADRACE ℄

VERTICAL SCALE 1:600
HORIZONTAL SCALE 1:3,000

NOTES :

1. ALL DIMENSIONS AND ELEVATIONS (M.S.L.) ARE IN METERS. UNLESS OTHERWISE SHOWN.
2. SYMBOLS, ABBREVIATIONS AND GENERAL NOTES SEE DWG. NO. KLP-GN-03

0 10 20 30 40 50
SCALE 1:600 METERS

0 50 100 150 200 250
SCALE 1:3,000 METERS

NO.	DATE	REVISIONS	CHECKED	APPROVED
3				
2				
1				
	CONSULTANTS		DEDE	

KINGDOM OF THAILAND
Department of Alternative Energy Development and Efficiency
MINISTRY OF ENERGY

KLONG LAM PLOK HYDROPOWER PROJECT

CIVIL WORKS AND TRANSMISSION LINE
GENERAL DRAWING
POWER WATERWAY HYDRAULIC ARRANGEMENT

P&C MANAGEMENT CO.,LTD.

DESIGNED			
DRAWN			
CHECKED			
PROJECT MANAGER	08/03/2559 DATE		

Department of Alternative Energy Development and Efficiency
MINISTRY OF ENERGY

REVIEWED	
SUBMITTED	
RECOMMENDED	
APPROVED	
DRAWING NO.	KLP-GN-05
SHEET NO.	5 OF 110

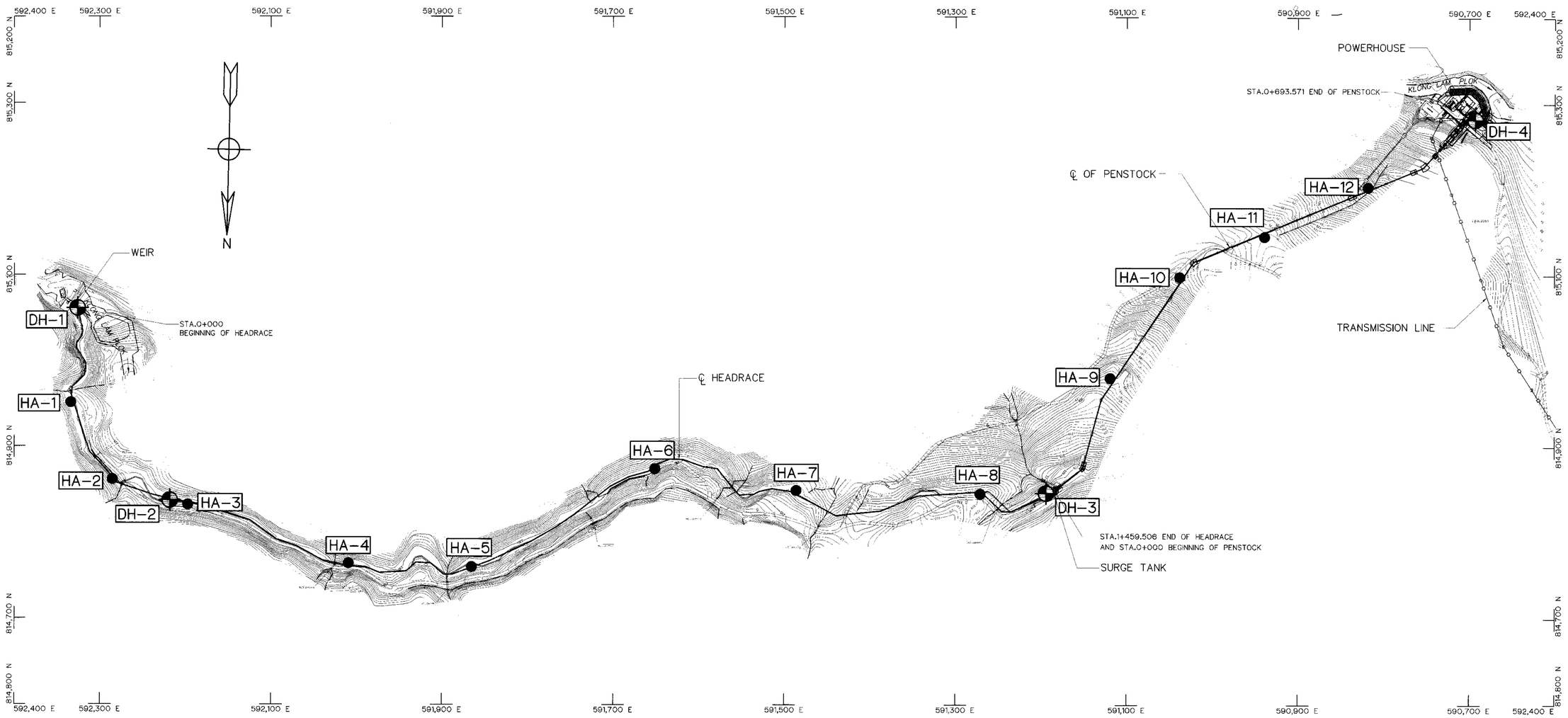

PROJECT LAYOUT

SCALE 1:2,500

NOTES :

1. ALL DIMENSIONS AND ELEVATIONS (M.S.L.) ARE IN METERS. UNLESS OTHERWISE SHOWN.
2. SYMBOLS, ABBREVIATIONS AND GENERAL NOTES SEE DWG. NO. KLP-GN-03

0 50 100 150 200

SCALE 1:2,500 METERS

NO.	DATE	REVISIONS	CHECKED	APPROVED
3				
2				
1				

CONSULTANTS | DEDE

KINGDOM OF THAILAND
Department of Alternative Energy Development and Efficiency
MINISTRY OF ENERGY

KLONG LAM PLOK HYDROPOWER PROJECT

CIVIL WORKS AND TRANSMISSION LINE
GENERAL DRAWING
GEOLOGICAL, PLAN

P&C MANAGEMENT CO.,LTD.

DESIGNED ฑ.28074 ฑ.6226
DRAWN
CHECKED ฑ.6226
PROJECT MANAGER 08/03/2559 DATE

Department of Alternative Energy Development and Efficiency
MINISTRY OF ENERGY

REVIEWED
SUBMITTED
RECOMMENDED
APPROVED

DRAWING NO. KLP-GN-06
SHEET NO. 6 OF 110

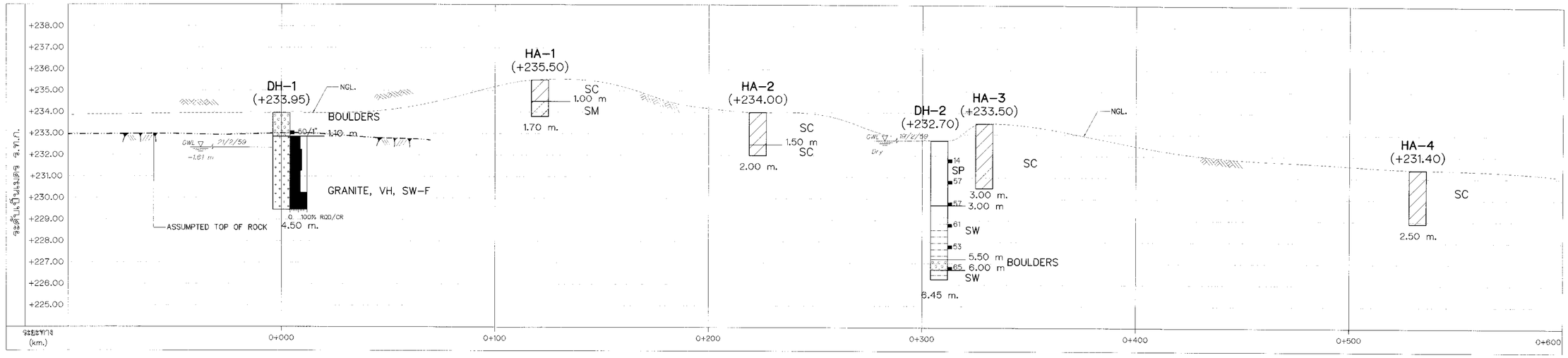

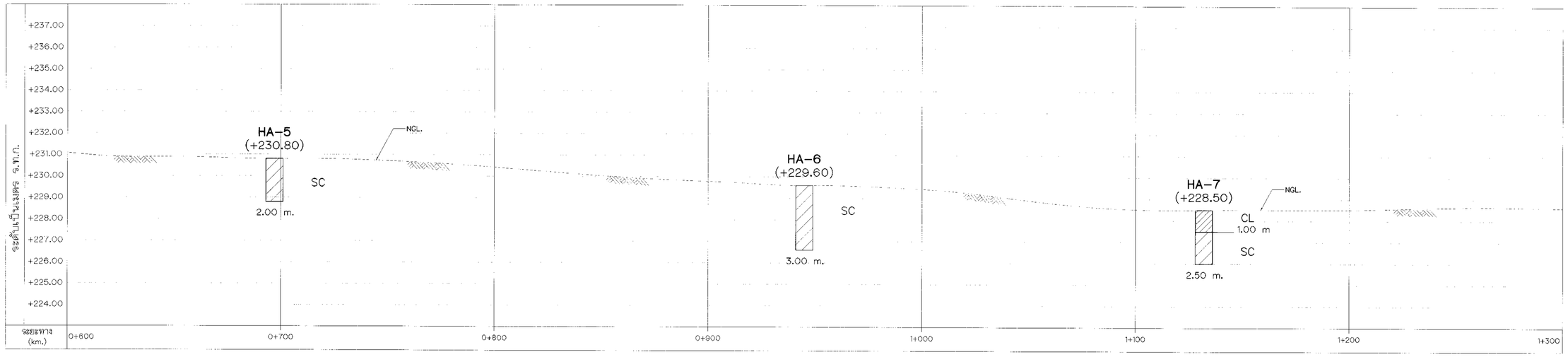

Explanation

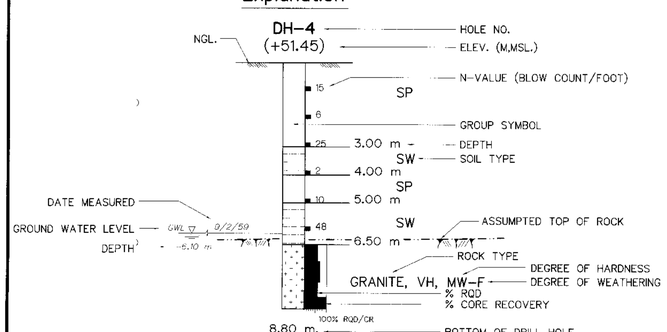

Legend

- CL = LEAN CLAY WITH SAND
- SC = CLAYEY SAND
- SP = POORLY GRADED SAND
- SW = WELL-GRADED SAND
- SW-SM = WELL-GRADED SAND WITH SILT
- SM = SILTY SAND
- BOULDERS
- GRANITE

DEGREE OF WEATHERING

F	= FRESH ROCK
SW	= SLIGHTLY WEATHERED ROCK
MW	= MODERATELY WEATHERED ROCK
HW	= HIGHLY WEATHERED ROCK
CW	= COMPLETELY WEATHERED ROCK

DEGREE OF HARDNESS

VS	= VERY SOFT ROCK
S	= SOFT ROCK
MH	= MEDIUM HARD ROCK
H	= HARD ROCK
VH	= VERY HARD ROCK

% RQD

< 25%	=	VERY POOR ROCK
25-50%	=	POOR ROCK
50-75%	=	FAIR ROCK
75-90%	=	GOOD ROCK
90-100%	=	VERY GOOD ROCK

DEGREE OF PERMEABILITY

1 = < 1 LUG EON OR $<10^{-5}$ CM/SEC = IMPERVIOUS

2 = 1-5 LUG EON OR 10^{-5} - $5X10^{-5}$ CM/SEC = SEMI - IMPERVIOUS

3 = 5-10 LUG EON OR $5X10^{-5}$ - 10^{-4} CM/SEC = SEMI - PERVIOUS

4 = 10-50 LUG EON OR 10^{-4} - $5X10^{-4}$ CM/SEC = RATHER - PERVIOUS

5 = > 50 LUG EON OR $>5X10^{-4}$ CM/SEC = PERVIOUS

0 1 2 3 4 5 6 7 8
SCALE 1:100 METERS

0 10 20 30 40 50 60 70 80
SCALE 1:1,000 METERS

NO.	DATE	REVISIONS	CHECKED	APPROVED
3				
2				
1				
	CONSULTANTS		DEDE	

KINGDOM OF THAILAND
Department of Alternative Energy Development and Efficiency
MINISTRY OF ENERGY

KLONG LAM PLOK HYDROPOWER PROJECT

CIVIL WORKS AND TRANSMISSION LINE
GENERAL DRAWING
GEOLOGICAL, PROFILE (SHEET 1/3)

P&C MANAGEMENT CO.,LTD.

Department of Alternative Energy Development and Efficiency
MINISTRY OF ENERGY

DESIGNED	สม.29074 สม.6226	SUBMITTED	
DRAWN		REVIEWED	
CHECKED	สม.6226	RECOMMENDED	
PROJECT MANAGER	08/03/2559 DATE	APPROVED	
DRAWING NO.	KLP-GN-07	SHEET NO.	7 OF 110

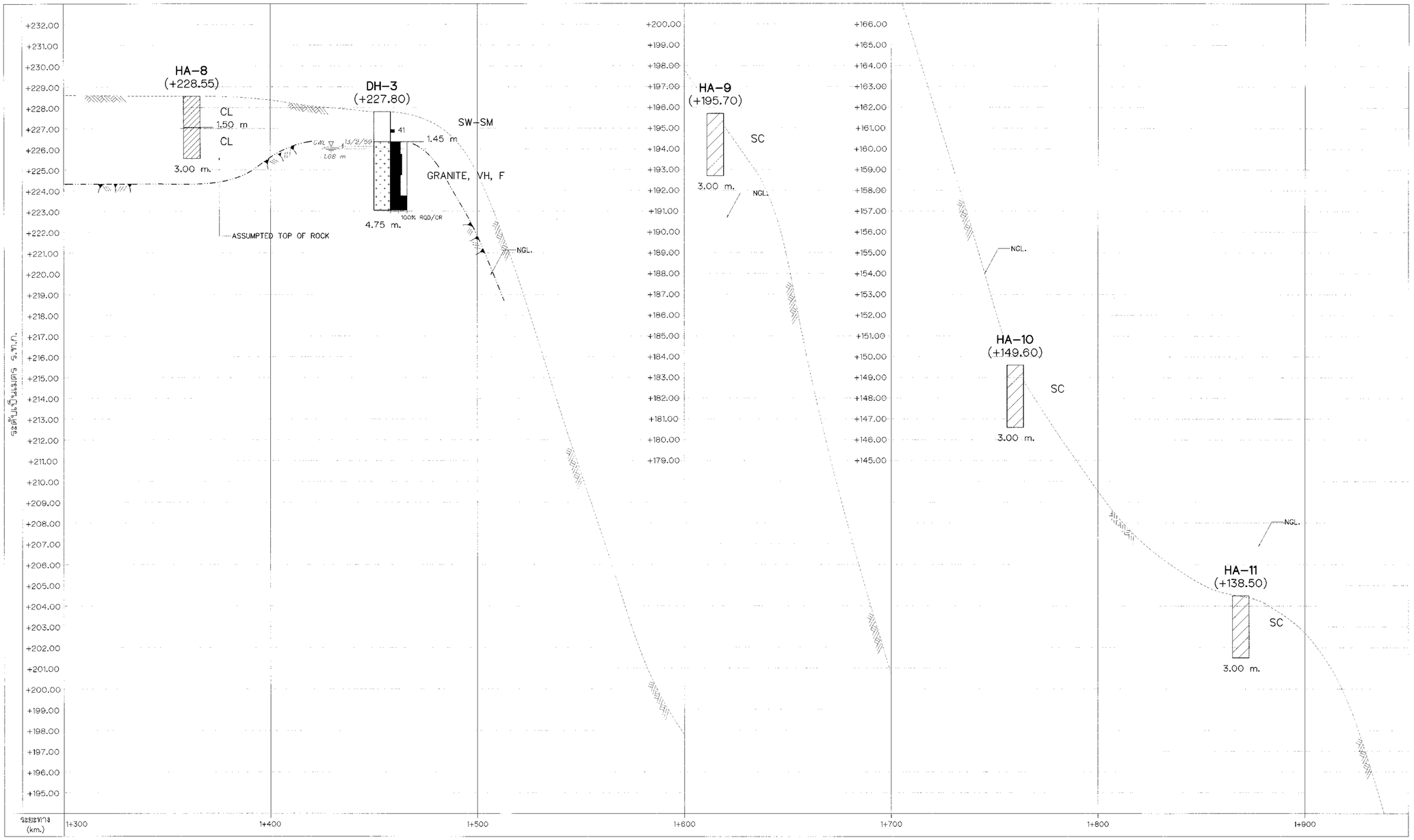

Explanation

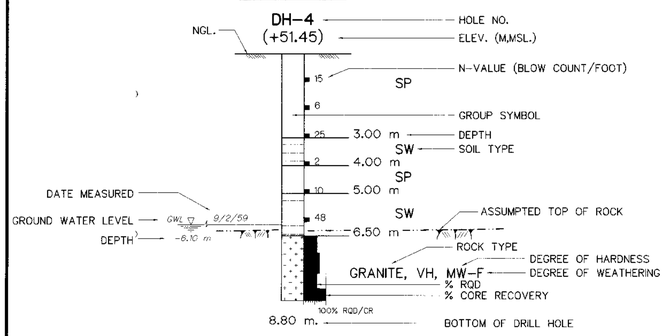

Legend

- CL = LEAN CLAY WITH SAND
- SC = CLAYEY SAND
- SP = POORLY GRADED SAND
- SW = WELL-GRADED SAND
- SW-SM = WELL-GRADED SAND WITH SILT
- SM = SILTY SAND
- BOULDERS
- GRANITE

DEGREE OF WEATHERING

- F = FRESH ROCK
- SW = SLIGHTLY WEATHERED ROCK
- MW = MODERATELY WEATHERED ROCK
- HW = HIGHLY WEATHERED ROCK
- CW = COMPLETELY WEATHERED ROCK

DEGREE OF HARDNESS

- VS = VERY SOFT ROCK
- S = SOFT ROCK
- MH = MEDIUM HARD ROCK
- H = HARD ROCK
- VH = VERY HARD ROCK

% RQD

- < 25% = VERY POOR ROCK
- 25-50% = POOR ROCK
- 50-75% = FAIR ROCK
- 75-90% = GOOD ROCK
- 90-100% = VERY GOOD ROCK

DEGREE OF PERMEABILITY

1 = < 1 LUG EON OR $<10^{-5}$ CM/SEC = IMPERVIOUS
2 = 1-5 LUG EON OR 10^{-5} - $5X10^{-5}$ CM/SEC = SEMI - IMPERVIOUS
3 = 5-10 LUG EON OR $5X10^{-5}$ - 10^{-4} CM/SEC = SEMI - PERVIOUS
4 = 10-50 LUG EON OR 10^{-4} - $5X10^{-4}$ CM/SEC = RATHER - PERVIOUS
5 = > 50 LUG EON OR $>5X10^{-4}$ CM/SEC = PERVIOUS

0 1 2 3 4 5 6 7 8
SCALE 1:100 METERS

0 10 20 30 40 50 60 70 80
SCALE 1:1,000 METERS

NO.	DATE	REVISIONS	CHECKED	APPROVED
3				
2				
1				

CONSULTANTS | DEDE

KINGDOM OF THAILAND
Department of Alternative Energy Development and Efficiency
MINISTRY OF ENERGY

KLONG LAM PLOK HYDROPOWER PROJECT

CIVIL WORKS AND TRANSMISSION LINE
GENERAL DRAWING
GEOLOGICAL, PROFILE (SHEET 2/3)

P&C MANAGEMENT CO.,LTD.

Department of Alternative Energy Development and Efficiency
MINISTRY OF ENERGY

DESIGNED	สธ.29074 สธ.6226	REVIEWED	
DRAWN		SUBMITTED	
CHECKED	สธ.6226	RECOMMENDED	
PROJECT MANAGER	08/03/2559 DATE	APPROVED	

DRAWING NO. KLP-GN-08

SHEET NO. 8 OF 110

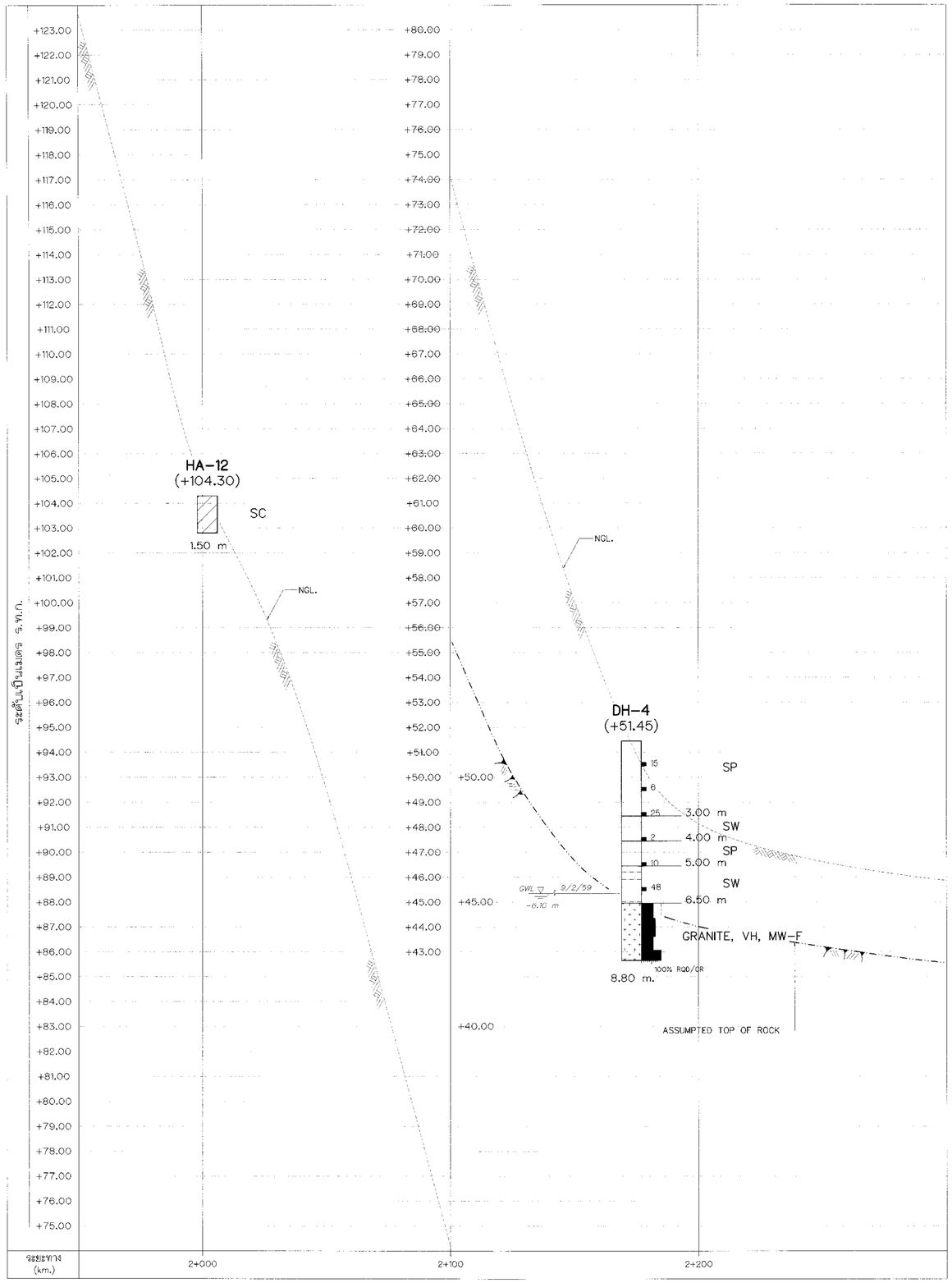

Explanation

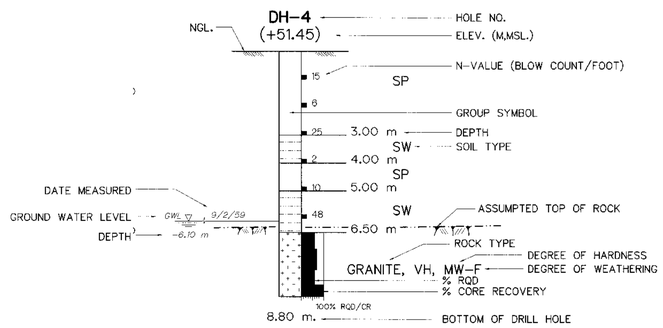

Legend

- CL = LEAN CLAY WITH SAND
- SC = CLAYEY SAND
- SP = POORLY GRADED SAND
- SW = WELL-GRADED SAND
- SW-SM = WELL-GRADED SAND WITH SILT
- SM = SILTY SAND
- BOULDERS
- GRANITE

DEGREE OF WEATHERING

- F = FRESH ROCK
- SW = SLIGHTLY WEATHERED ROCK
- MW = MODERATELY WEATHERED ROCK
- HW = HIGHLY WEATHERED ROCK
- CW = COMPLETELY WEATHERED ROCK

DEGREE OF HARDNESS

- VS = VERY SOFT ROCK
- S = SOFT ROCK
- MH = MEDIUM HARD ROCK
- H = HARD ROCK
- VH = VERY HARD ROCK

% RQD

- < 25% = VERY POOR ROCK
- 25-50% = POOR ROCK
- 50-75% = FAIR ROCK
- 75-90% = GOOD ROCK
- 90-100% = VERY GOOD ROCK

DEGREE OF PERMEABILITY

- 1 = < 1 LUG EON OR $<10^{-5}$ CM/SEC = IMPERVIOUS
- 2 = 1-5 LUG EON OR 10^{-5} - $5X10^{-5}$ CM/SEC = SEMI - IMPERVIOUS
- 3 = 5-10 LUG EON OR $5X10^{-5}$ - 10^{-4} CM/SEC = SEMI - PERVIOUS
- 4 = 10-50 LUG EON OR 10^{-4} - $5X10^{-4}$ CM/SEC = RATHER - PERVIOUS
- 5 = > 50 LUG EON OR $>5X10^{-4}$ CM/SEC = PERVIOUS

0 1 2 3 4 5 6 7 8
SCALE 1:100 METERS

0 10 20 30 40 50 60 70 80
SCALE 1:1,000 METERS

KINGDOM OF THAILAND
Department of Alternative Energy Development and Efficiency
MINISTRY OF ENERGY

KLONG LAM PLOK HYDROPOWER PROJECT

CIVIL WORKS AND TRANSMISSION LINE
GENERAL DRAWING
GEOLOGICAL, PROFILE (SHEET 3/3)

NO.	DATE	REVISIONS	CHECKED	APPROVED
3				
2				
1				

CONSULTANTS | DEDE

P&C MANAGEMENT CO.,LTD.

DESIGNED ศิริ.29074 ศิริ.6226
DRAWN
CHECKED ศิริ.6226
PROJECT MANAGER 08/03/2559 DATE

Department of Alternative Energy Development and Efficiency MINISTRY OF ENERGY
REVIEWED
SUBMITTED
RECOMMENDED
APPROVED

DRAWING NO. KLP-GN-09
SHEET NO. 9 OF 110

KLONG LAM PLOK

LINNING WITH CONCRETE RESURFACE MATERIAL

CONSTRUCT NEW INTAKE STRUCTURE

EXISTING WEIR

EL.+239.60

EL.+232.80

EL.+234.050

EL.+238.20

EXISTING SERVICE BRIDGE

EXISTING SLUICE WAY

EXISTING SAND SLUICE GATE

DEMOLISH EXISTING HEADWALL AND OPERATING PLATFORM

CONSTRUCT NEW SERVICE BRIDGE

EXISTING STEEL FRAME

FILL OPENINGS WITH PLAIN CONCRETE

EXISTING INTAKE STRUCTURE

REMOVE ALL MECHANICAL WORK AND STEEL FRAME

0.10 GROUND SLAB

EXISTING HEADRACE

STA.0+000 BEGINNING OF HEADRACE

℄ OF HEADRACE

℄ OF O&M ROAD

CONSTRUCT CONCRETE ROAD

STEEL STAIR

CONSTRUCT RETAINING WALL

EXISTING BOULDER

REMOVE EXISTING BOULDER

7.80

8.00

3.00

0.30

7.20

1.20

592,300 E

592,320 E

592,340 E

592,360 E

815,000 N

815,020 N

815,040 N

815,060 E

815,070 E

+235.00

+236.00

+238.00

+240.00

+242.00

+245.00

+247.00

+250.00

GENERAL LAY-OUT

SCALE 1:125

LEGEND :

EXISTING STRUCTURE

NOTES :

1. ALL DIMENSIONS AND ELEVATIONS (M.S.L.) ARE IN METERS, UNLESS OTHERWISE SHOWN.
2. SYMBOLS, ABBREVIATIONS AND GENERAL NOTES SEE DWG. NO. KLP-GN-03
3. INTAKE STRUCTURE SHALL BE PLACED ON BED ROCK FOUNDATION, OTHER MATERIALS SHALL BE REMOVED AND BACKFILLED WITH LEAN CONCRETE AND THE LEAN CONCRETE SHALL HAVE THE COMPRESSIVE STRENGTH OF 140 KSC. FOR STANDARD CYLINDER AT 28 DAYS.
4. ALLOWABLE BEARING CAPACITY NOT LESS THAN 15 TON/sq m.

REFERENCE DRAWINGS :

1.	WEIR : WEIR REHABILITATION SECTION AND DETAILS	KLP-WE-02
2.	WEIR : WEIR REHABILITATION SERVICE BRIDGE	KLP-WE-03
3.	WEIR : INTAKE STRUCTURE PLAN AND SECTIONS	KLP-WE-04
4.	WEIR : INTAKE STRUCTURE MISCELLANEOUS DETAILS	KLP-WE-08

0 1 2 4 6 8 10

SCALE 1:125 METERS

KINGDOM OF THAILAND
Department of Alternative Energy Development and Efficiency
MINISTRY OF ENERGY

KLONG LAM PLOK HYDROPOWER PROJECT

CIVIL WORKS AND TRANSMISSION LINE
WEIR : WEIR REHABILITATION
GENERAL LAY-OUT

NO.	DATE	REVISIONS	CHECKED	APPROVED
3				
2				
1				

CONSULTANTS — DEDE

P&C MANAGEMENT CO.,LTD.

Department of Alternative Energy Development and Efficiency
MINISTRY OF ENERGY

DESIGNED	281.29074	REVIEWED	
DRAWN		SUBMITTED	
CHECKED	281.6226	RECOMMENDED	
PROJECT MANAGER	08/03/2559 DATE	APPROVED	

DRAWING NO. KLP-WE-01

SHEET NO. 10 OF 110

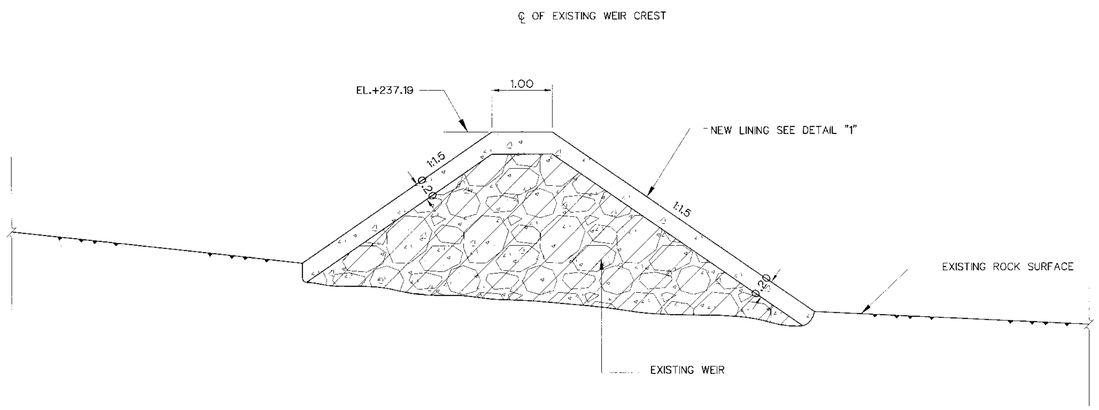

SECTION OF WEIR A–A

SCALE 1:50

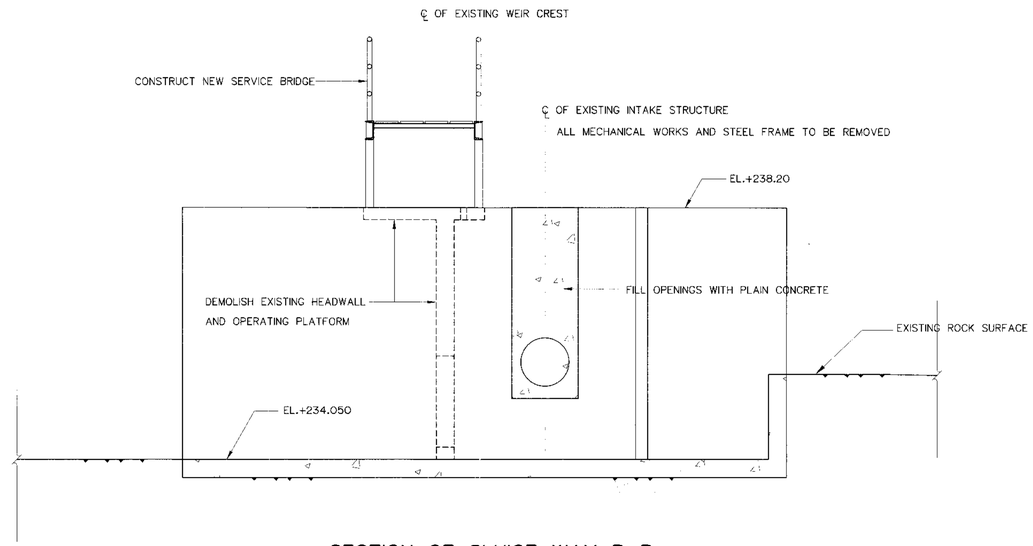

SECTION OF SLUICE WAY B–B

SCALE 1:50

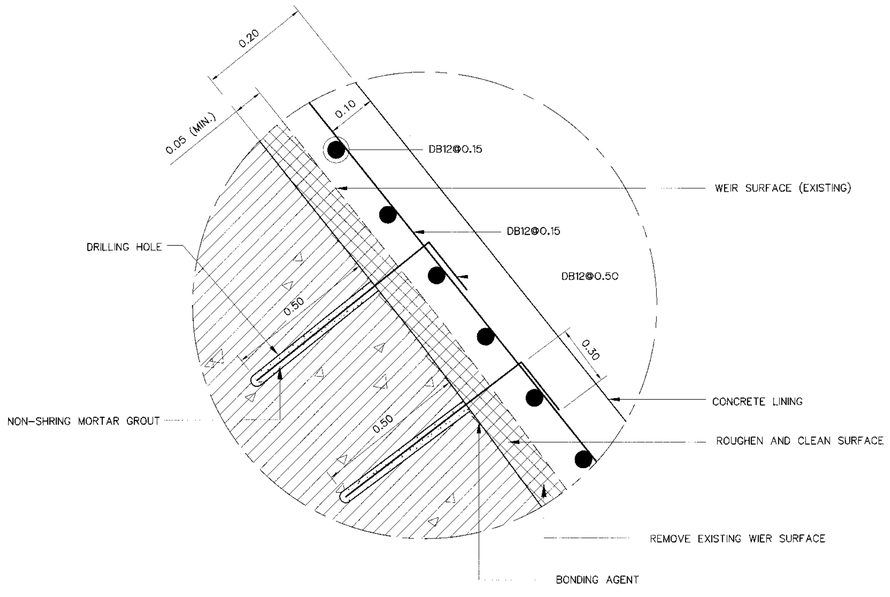

DETAIL "1"

SCALE 1:10

STEP OF LINING :

1. CONCRETE REMOVAL TECHNIQUES USED SHOULD BE EFFECTIVE, FAST, SAFE, ECONOMICAL AND ENVIRONMENTALLY FRIENDLY. THE EXISTING CONCRETE SURFACE MUST BE DRY, CLEAN, ROUGH AND FREE OF DUST SO THAT THE POURED CONCRETE WILL STICK TO THE OLD CONCRETE
2. THE REPAIRED SURFACE SHOULD BE CLEANED THOROUGHLY BY WET SAND BLASTING OR DRY SAND BLASTING OR SHOT BLASTING OR OTHER EQUIVALENT METHOD. FINALLY, IT SHOULD BE CLEANED BY WIND OR WATER USING PRESSURE.
3. A HOLE IS DRILLED TO INSTALL DOWEL BAR FIXED BY NON-SHRINK CEMENT GROUT AND INSTALL REINFORCED CONCRETE SO THAT THE POURED CONCRETE CAN REMAIN AND STICK TO THE OLD CONCRETE.
4. BEFORE POURING CONCRETE, APPLY MORTAR TO A THIN CONCRETE SURFACE NOT EXCEEDING 3 MM AND USE EPOXY RESIN BONDING AGENT, ASTM C881, TYPE II OR TYPE V.

NOTES :

1. ALL DIMENSIONS AND ELEVATIONS (M.S.L.) ARE IN METERS, UNLESS OTHERWISE SHOWN.
2. SYMBOLS, ABBREVIATIONS AND GENERAL NOTES SEE DWG. NO. KLP-GN-03
3. CONCRETE DESIGN BASED ON THE COMPRESSIVE STRENGTH OF 210 KSC, STANDARD CYLINDER Ø0.15x0.30 m. TEST AT AGE 28 DAYS. UNLESS OTHERWISE INDICATED IN SPECIFIC DRAWINGS.
4. ULTIMATE TENSILE STRESSES OF REINFORCING STEEL, CONFORM TO THE REQUIREMENT OF THAI INDUSTRIAL STANDARD DESIGNATION SR24 FOR STRUCTURAL GRADE PLAIN ROUND BAR AND SD30 FOR INTERMEDIATE GRADE DEFORMED BAR.

REFERENCE DRAWINGS :

1. WEIR : WEIR REHABILITATION GENERAL LAY-OUT KLP-WE-01

0 1 2 3 4 5 6
SCALE 1:75 METERS

NO.	DATE	REVISIONS	CHECKED	APPROVED
3				
2				
1				

CONSULTANTS DEDE

KINGDOM OF THAILAND
Department of Alternative Energy Development and Efficiency
MINISTRY OF ENERGY

KLONG LAM PLOK HYDROPOWER PROJECT

CIVIL WORKS AND TRANSMISSION LINE
WEIR : WEIR REHABILITATION
SECTION AND DETAILS

P&C MANAGEMENT CO.,LTD.

Department of Alternative Energy Development and Efficiency
MINISTRY OF ENERGY

DESIGNED	ภัททิ.29074	สธิ.6226	REVIEWED
DRAWN			SUBMITTED
CHECKED	สธิ.6226		RECOMMENDED
			APPROVED

PROJECT MANAGER 08/03/2559 DATE

DRAWING NO. KLP-WE-02

SHEET NO. 11 OF 110

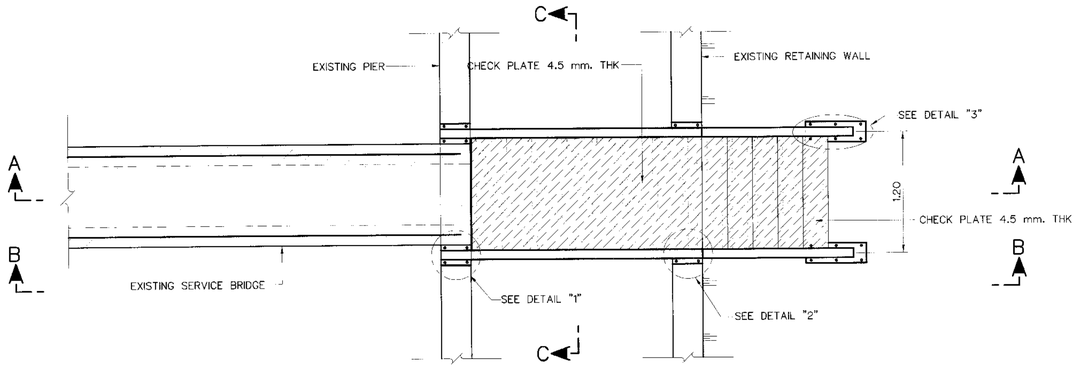

PLAN
SCALE 1:30

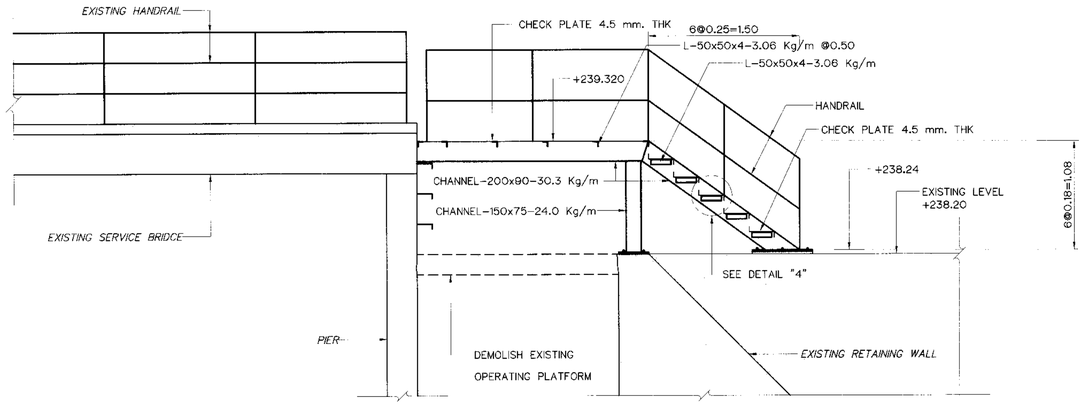

SECTION A-A
SCALE 1:30

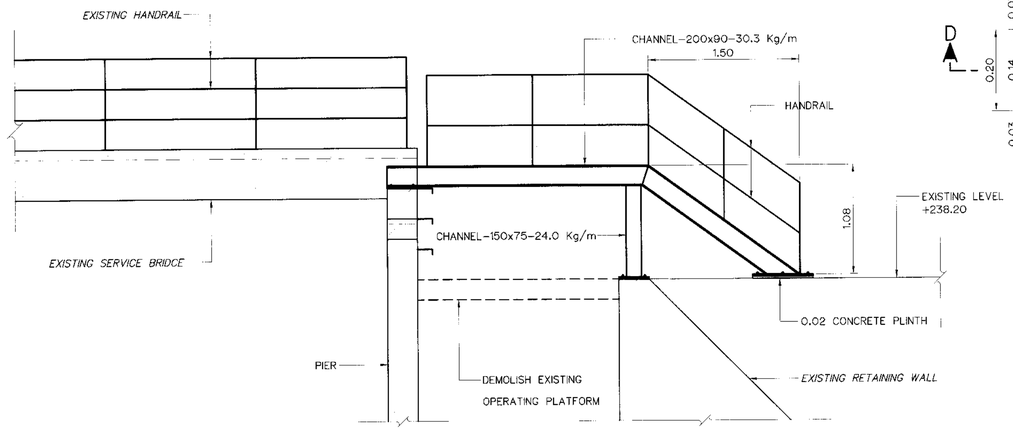

SECTION B-B
SCALE 1:30

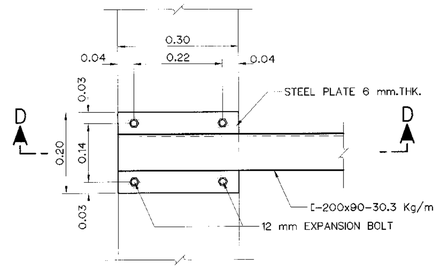

DETAIL "1"
SCALE 1:7.5

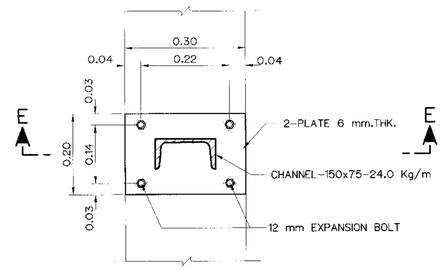

DETAIL "2"
SCALE 1:7.5

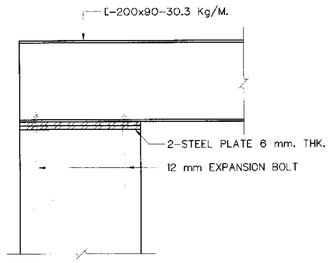

SECTION D-D
SCALE 1:7.5

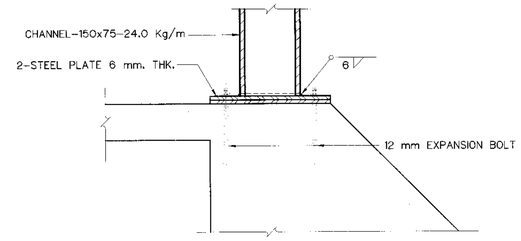

SECTION E-E
SCALE 1:7.5

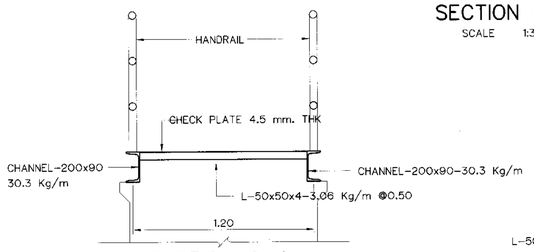

SECTION C-C
SCALE 1:20

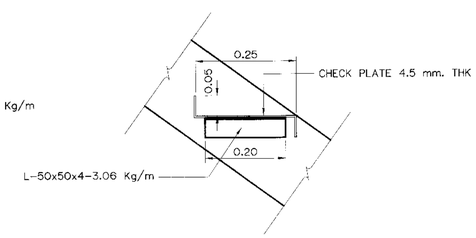

DETAIL "4"
SCALE 1:7.5

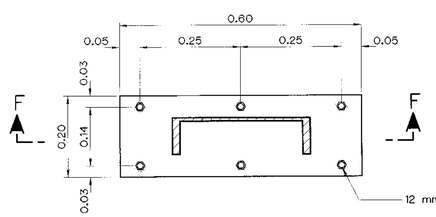

DETAIL "3"
SCALE 1:7.5

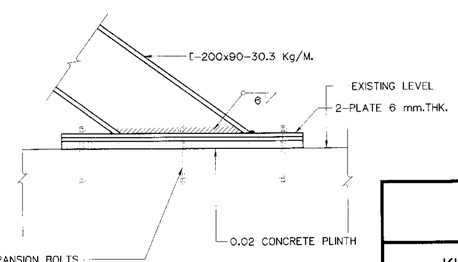

SECTION F-F
SCALE 1:7.5

NOTES :

1. ALL DIMENSIONS AND ELEVATIONS (M.S.L.) ARE IN METERS, UNLESS OTHERWISE SHOWN.
2. SYMBOLS, ABBREVIATIONS AND GENERAL NOTES SEE DWG. NO. KLP-GN-03
3. SPACING OF HANDRAIL CAN BE ADJUSTED IN THE FIELD TO FIT WITH THE STRUCTURE BY CONTRACTOR AND APPROVED BY ENGINEER.
4. WELDING CONNECTION USE 6 MM.,UNLESS OTHERWISE SHOWN

REFERENCE DRAWINGS :

1. WEIR : WEIR REHABILITATION GENERAL LAY-OUT KLP-WE-01

0 0.1 0.2 0.3 0.4 0.5 0.6
SCALE 1:7.5 METERS

0 0.5 1 1.5
SCALE 1:20 METERS

0 0.2 0.4 0.8 1.2 1.6 2.0 2.4
SCALE 1:30 METERS

NO.	DATE	REVISIONS	CHECKED	APPROVED
3				
2				
1				
	CONSULTANTS		DEDE	

KINGDOM OF THAILAND
Department of Alternative Energy Development and Efficiency
MINISTRY OF ENERGY

KLONG LAM PLOK HYDROPOWER PROJECT

CIVIL WORKS AND TRANSMISSION LINE
WEIR : WEIR REHABILITATION
SERVICE BRIDGE

P&C MANAGEMENT CO.,LTD.

Department of Alternative Energy Development and Efficiency
MINISTRY OF ENERGY

DESIGNED	วิศ.29074	วิศ.6226	REVIEWED
DRAWN			SUBMITTED
CHECKED		วิศ.6226	RECOMMENDED
			APPROVED
PROJECT MANAGER		08/03/2559 DATE	DRAWING NO. KLP-WE-03

SHEET NO. 12 OF 110

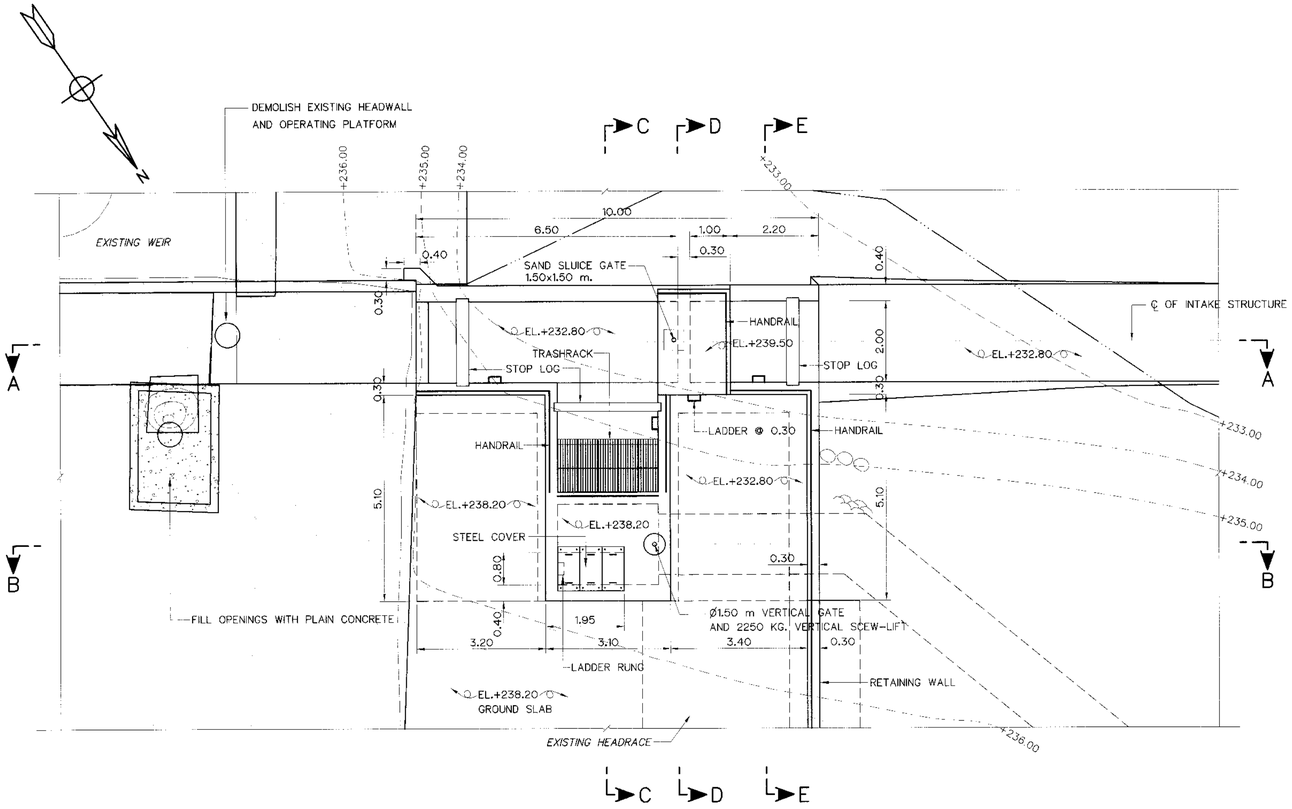

PLAN
SCALE 1:75

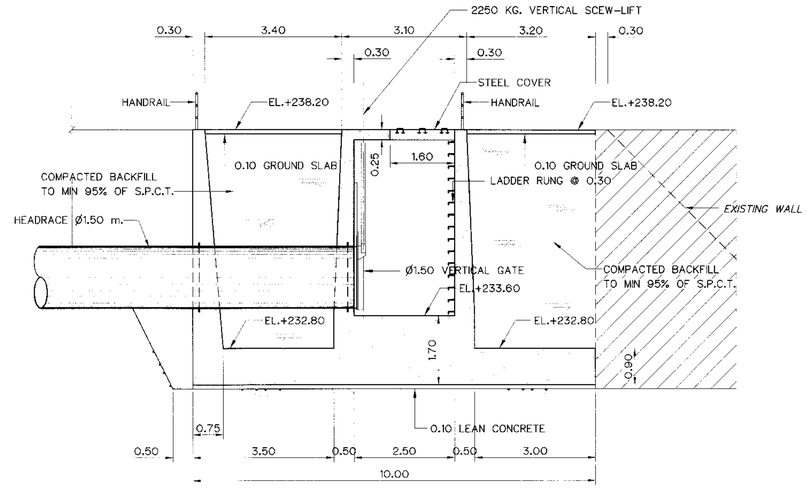

SECTION B–B
SCALE 1:75

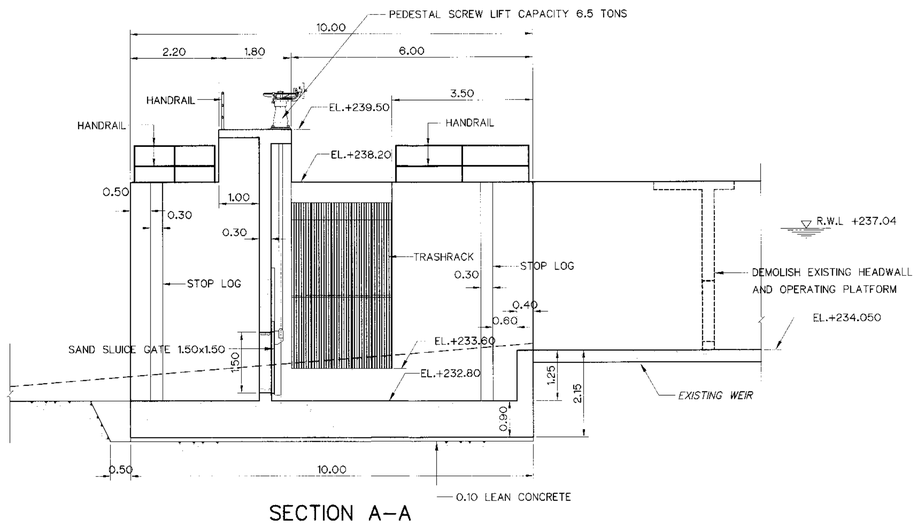

SECTION A–A
SCALE 1:75

LEGEND :

EXISTING STRUCTURE

NOTES :

1. ALL DIMENSIONS AND ELEVATIONS (M.S.L.) ARE IN METERS, UNLESS OTHERWISE SHOWN.
2. SYMBOLS, ABBREVIATIONS AND GENERAL NOTES SEE DWG. NO. KLP–GN–03
3. SPACING OF HANDRAIL CAN BE ADJUSTED IN THE FIELD TO FIT WITH THE STRUCTURE BY CONTRACTOR AND APPROVED BY ENGINEER.
4. INTAKE SHALL BE PLACED ON BED ROCK FOUNDATION, OTHER MATERIALS SHALL BE REMOVED AND BACKFILLED WITH LEAN CONCRETE AND THE LEAN CONCRETE SHALL HAVE THE COMPRESSIVE STRENGTH OF 140 KSC. FOR STANDARD CYLINDER AT 28 DAYS.
5. ALLOWABLE BEARING CAPACITY NOT LESS THAN 15 TON/sq m.

REFERENCE DRAWINGS :

1. WEIR : WEIR REHABILITATION GENERAL LAY-OUT KLP–WE–01

0 1 2 3 4 5 6
SCALE 1:75 METERS

NO.	DATE	REVISIONS	CHECKED	APPROVED
3				
2				
1				

CONSULTANTS | DEDE

KINGDOM OF THAILAND
Department of Alternative Energy Development and Efficiency
MINISTRY OF ENERGY

KLONG LAM PLOK HYDROPOWER PROJECT

CIVIL WORKS AND TRANSMISSION LINE
WEIR : INTAKE STRUCTURE
PLAN AND SECTIONS

P&C MANAGEMENT CO.,LTD.

Department of Alternative Energy Development and Efficiency
MINISTRY OF ENERGY

REVIEWED
SUBMITTED
RECOMMENDED
APPROVED

DESIGNED 28.29074 28.6226
DRAWN
CHECKED 28.6226

PROJECT MANAGER 08/03/2559 DATE

DRAWING NO. KLP–WE–04
SHEET NO. 13 OF 110

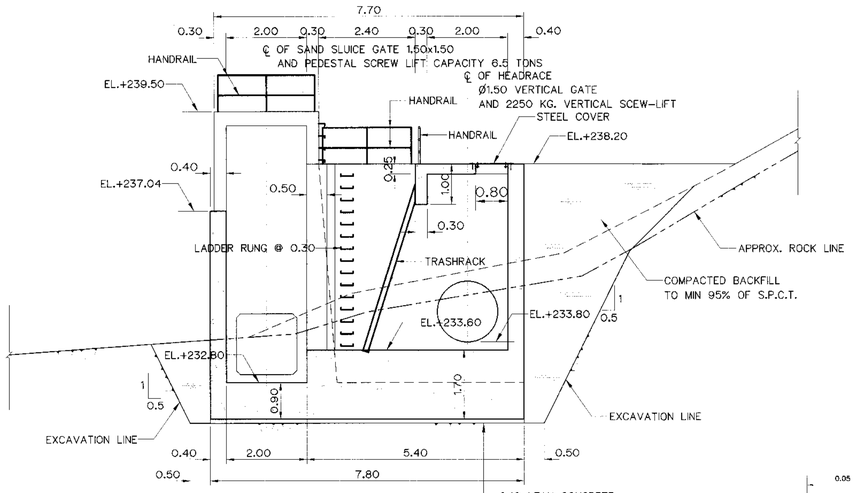

SECTION C–C

SCALE 1:75

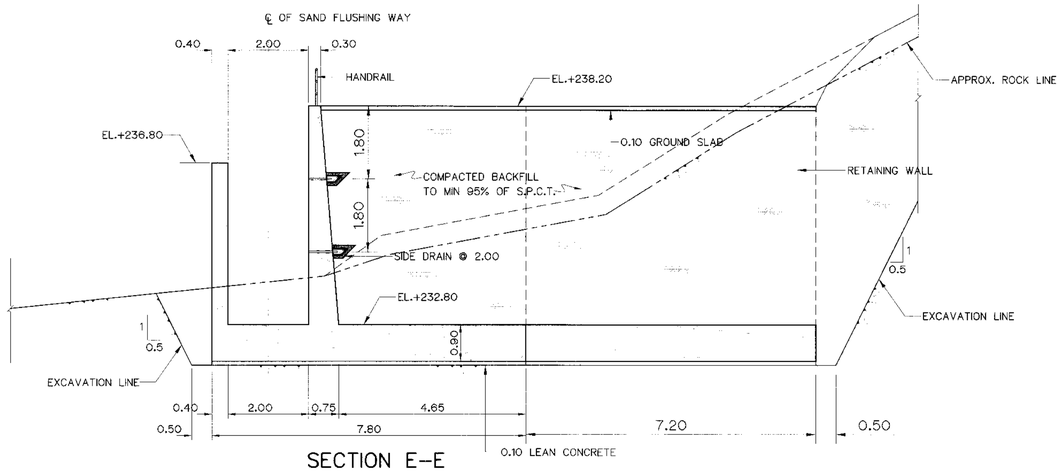

SECTION E–E

SCALE 1:75

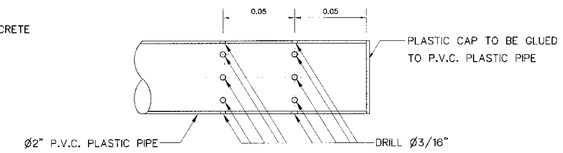

DRAIN PIPE DETAIL

NOT TO SCALE

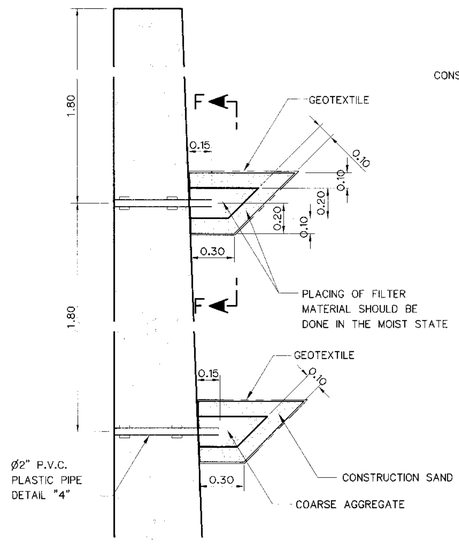

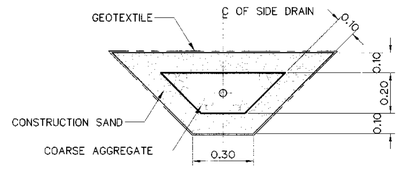

SECTION F–F

SCALE 1:15

0 1 2 3 4 5 6

SCALE 1:75 METERS

DETAIL OF SIDE DRAIN

NOT TO SCALE

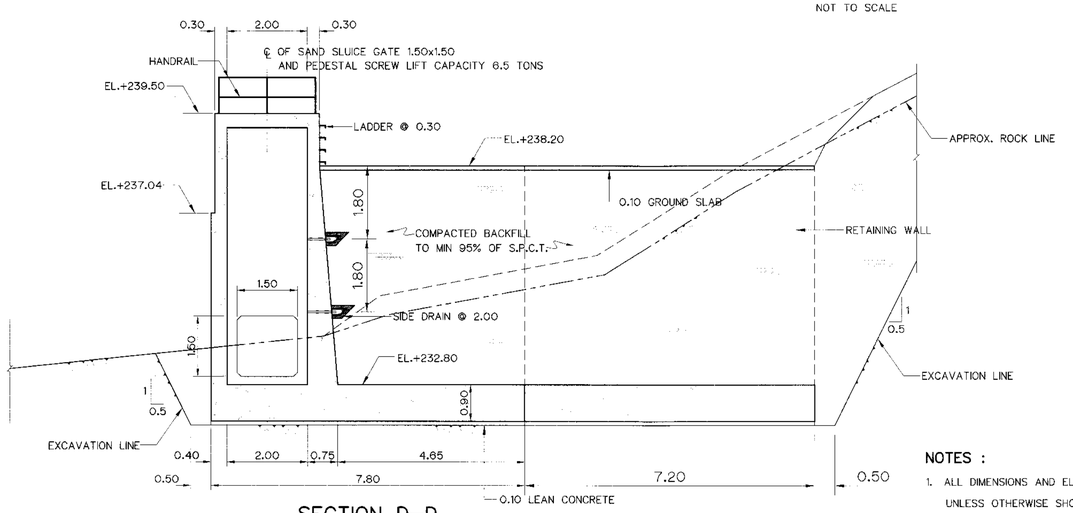

SECTION D–D

SCALE 1:75

NOTES :

1. ALL DIMENSIONS AND ELEVATIONS (M.S.L.) ARE IN METERS, UNLESS OTHERWISE SHOWN.
2. SYMBOLS, ABBREVIATIONS AND GENERAL NOTES SEE DWG. NO. KLP–GN–03
3. SPACING OF HANDRAIL CAN BE ADJUSTED IN THE FIELD TO FIT WITH THE STRUCTURE BY CONTRACTOR AND APPROVED BY ENGINEER.
4. INTAKE SHALL BE PLACED ON BED ROCK FOUNDATION, OTHER MATERIALS SHALL BE REMOVED AND BACKFILLED WITH LEAN CONCRETE AND THE LEAN CONCRETE SHALL HAVE THE COMPRESSIVE STRENGTH OF 140 KSC. FOR STANDARD CYLINDER AT 28 DAYS.
5. ALLOWABLE BEARING CAPACITY NOT LESS THAN 15 TON/sq m.

REFERENCE DRAWINGS :

1. WEIR : INTAKE STRUCTURE PLAN AND SECTIONS KLP–WE–04

NO.	DATE	REVISIONS	CHECKED	APPROVED
3				
2				
1				

CONSULTANTS | DEDE

KINGDOM OF THAILAND
Department of Alternative Energy Development and Efficiency
MINISTRY OF ENERGY

KLONG LAM PLOK HYDROPOWER PROJECT

CIVIL WORKS AND TRANSMISSION LINE

WEIR : INTAKE STRUCTURE

SECTIONS

P&C MANAGEMENT CO.,LTD.

DESIGNED 28.29074 28.6226
DRAWN
CHECKED 28.6226
PROJECT MANAGER 08/03/2559 DATE

Department of Alternative Energy Development and Efficiency
MINISTRY OF ENERGY
REVIEWED
SUBMITTED
RECOMMENDED
APPROVED

DRAWING NO. KLP–WE–05

SHEET NO. 14 OF 110

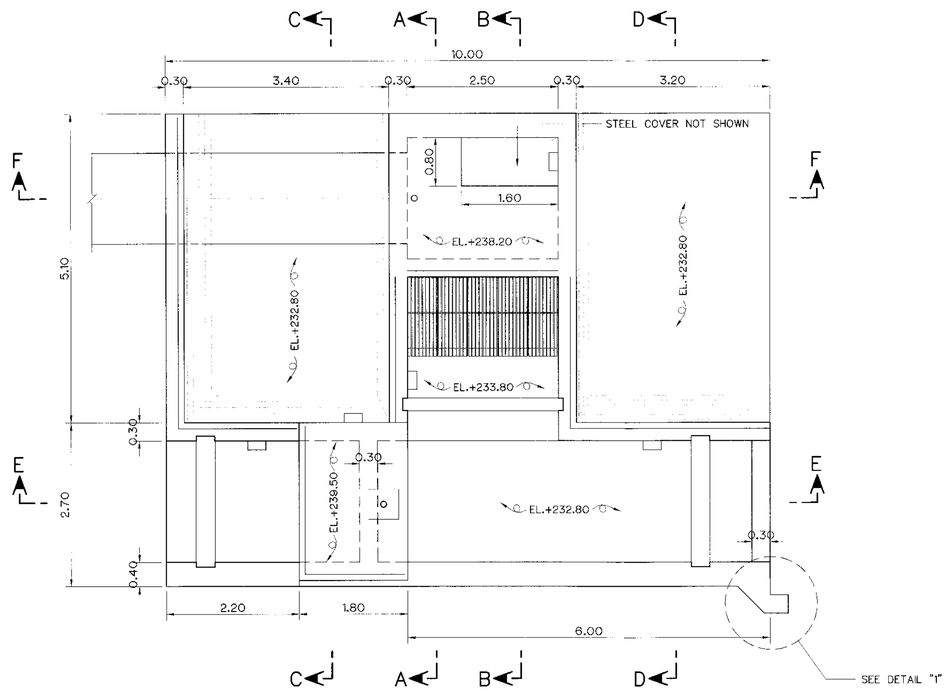

PLAN

SCALE 1:50

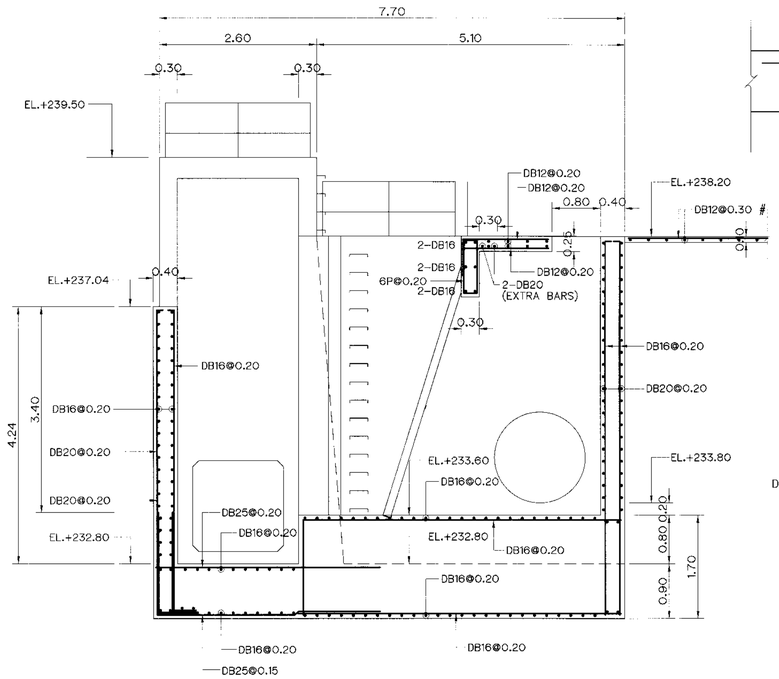

SECTION B-B

SCALE 1:50

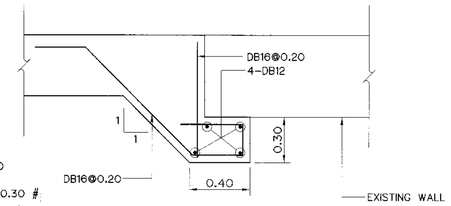

DETAIL "1"

SCALE 1:25

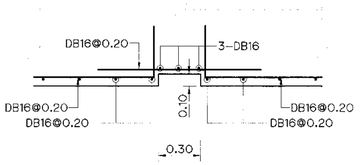

STOP LOG DETAIL

NOT TO SCALE

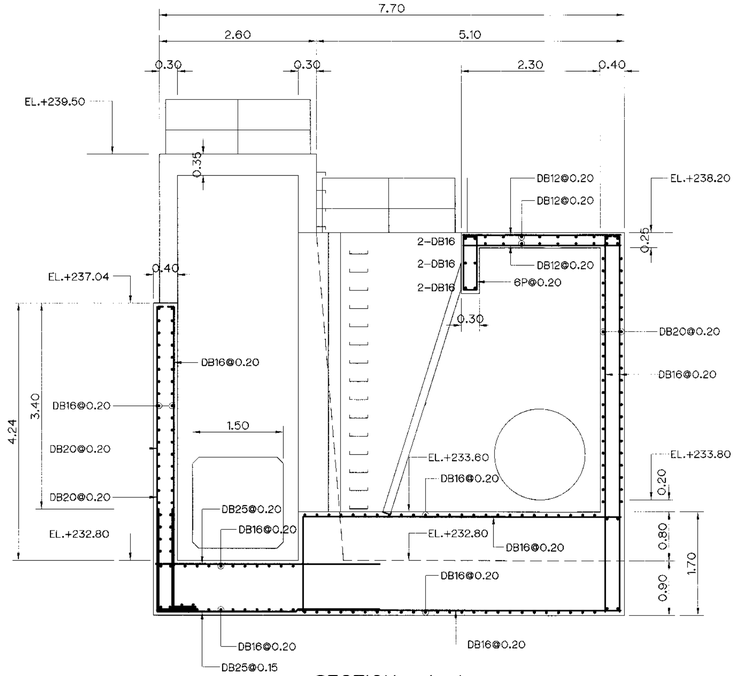

SECTION A-A

SCALE 1:50

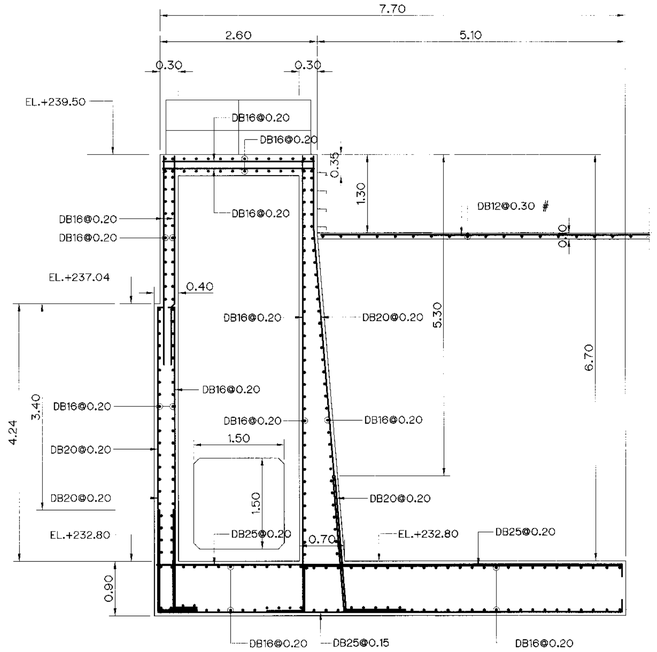

SECTION C-C

SCALE 1:50

NOTES :

1. ALL DIMENSIONS AND ELEVATIONS (M.S.L.) ARE IN METERS, UNLESS OTHERWISE SHOWN.
2. SYMBOLS, ABBREVIATIONS AND GENERAL NOTES SEE DWG. NO. KLP-GN-03
3. CONCRETE DESIGN BASED ON THE COMPRESSIVE STRENGTH OF 210 KSC, STANDARD CYLINDER Ø0.15x0.30 m. TEST AT AGE 28 DAYS. UNLESS OTHERWISE INDICATED IN SPECIFIC DRAWINGS.
4. ULTIMATE TENSILE STRESSES OF REINFORCING STEEL, CONFORM TO THE REQUIREMENT OF THAI INDUSTRIAL STANDARD DESIGNATION SR24 FOR STRUCTURAL GRADE PLAIN ROUND BAR AND SD30 FOR INTERMEDIATE GRADE DEFORMED BAR.

REFERENCE DRAWINGS :

1. WEIR : WEIR REHABILITATION GENERAL LAY-OUT KLP-WE-01
2. WEIR : INTAKE STRUCTURE REINFORCEMENT DETAILS (SHEET 2/2) KLP-WE-07

0 0.5 1 2 3 4

SCALE 1:50 METERS

KINGDOM OF THAILAND
Department of Alternative Energy Development and Efficiency
MINISTRY OF ENERGY

KLONG LAM PLOK HYDROPOWER PROJECT

CIVIL WORKS AND TRANSMISSION LINE
WEIR : INTAKE STRUCTURE
REINFORCEMENT DETAILS (SHEET 1/2)

NO.	DATE	REVISIONS	CHECKED	APPROVED
3				
2				
1				

CONSULTANTS DEDE

P&C MANAGEMENT CO.,LTD.

DESIGNED 28.29074 28.6226
DRAWN
CHECKED 28.6226
PROJECT MANAGER 08/03/2559 DATE

Department of Alternative Energy Development and Efficiency
MINISTRY OF ENERGY
REVIEWED
SUBMITTED
RECOMMENDED
APPROVED

DRAWING NO. KLP-WE-06

SHEET NO. 15 OF 110

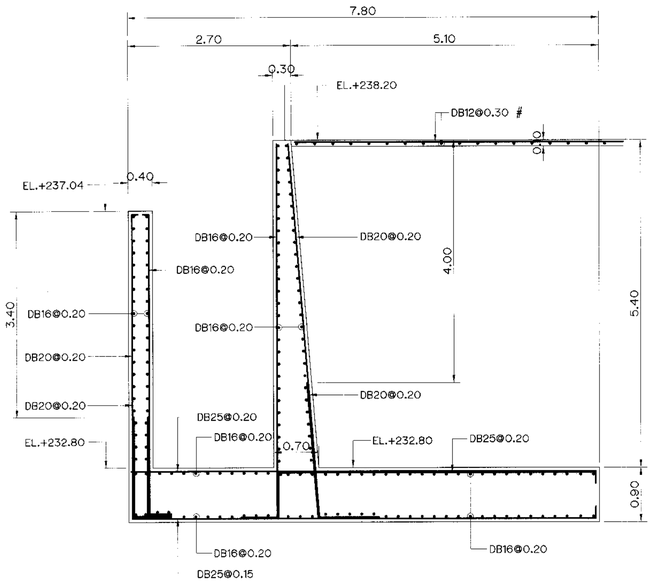

SECTION D-D

SCALE 1:50

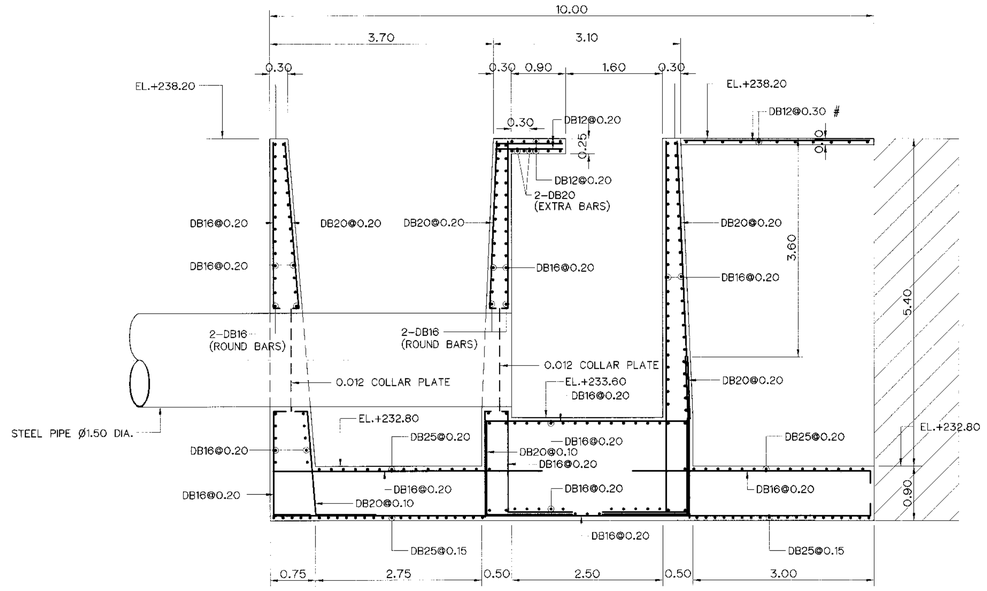

SECTION F-F

SCALE 1:50

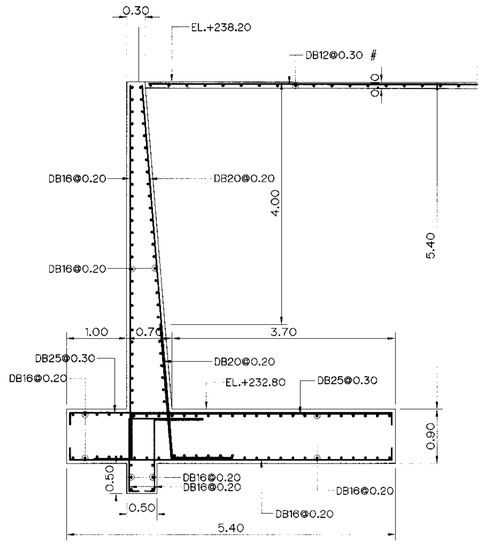

RETAINING WALL

SCALE 1:50

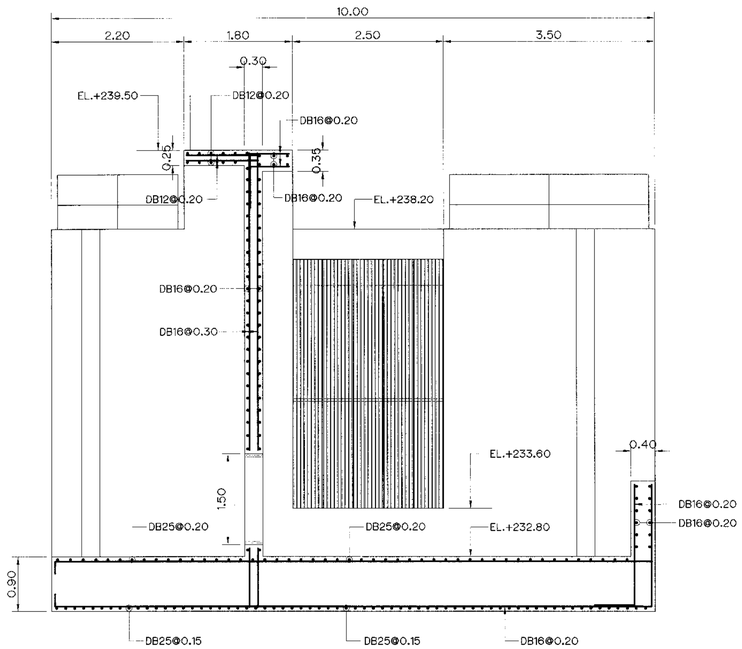

SECTION E-E

SCALE 1:50

NOTES :

1. ALL DIMENSIONS AND ELEVATIONS (M.S.L.) ARE IN METERS, UNLESS OTHERWISE SHOWN.
2. SYMBOLS, ABBREVIATIONS AND GENERAL NOTES SEE DWG. NO. KLP-GN-03
3. CONCRETE DESIGN BASED ON THE COMPRESSIVE STRENGTH OF 210 KSC, STANDARD CYLINDER Ø0.15x0.30 m. TEST AT AGE 28 DAYS. UNLESS OTHERWISE INDICATED IN SPECIFIC DRAWINGS.
4. ULTIMATE TENSILE STRESSES OF REINFORCING STEEL, CONFORM TO THE REQUIREMENT OF THAI INDUSTRIAL STANDARD DESIGNATION SR24 FOR STRUCTURAL GRADE PLAIN ROUND BAR AND SD30 FOR INTERMEDIATE GRADE DEFORMED BAR.

REFERENCE DRAWINGS :

1. WEIR : INTAKE STRUCTURE REINFORCEMENT DETAILS (SHEET 1/2) KLP-WE-06

0 0.5 1 2 3 4

SCALE 1:50 METERS

NO.	DATE	REVISIONS	CHECKED	APPROVED
3				
2				
1				

CONSULTANTS | DEDE

KINGDOM OF THAILAND
Department of Alternative Energy Development and Efficiency
MINISTRY OF ENERGY

KLONG LAM PLOK HYDROPOWER PROJECT

CIVIL WORKS AND TRANSMISSION LINE
WEIR : INTAKE STRUCTURE
REINFORCEMENT DETAILS (SHEET 2/2)

P&C MANAGEMENT CO.,LTD.

Department of Alternative Energy Development and Efficiency
MINISTRY OF ENERGY

DESIGNED RE.29074 RE.6226
DRAWN
CHECKED RE.6226
PROJECT MANAGER 08/03/2559 DATE

REVIEWED
SUBMITTED
RECOMMENDED
APPROVED P. Hanyoff

DRAWING NO. KLP-WE-07

SHEET NO. 16 OF 110

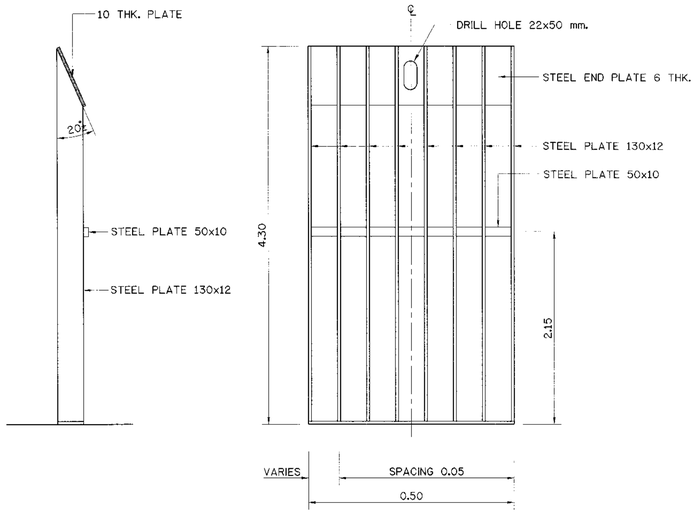

TRASHRACK DETAILS

NOT TO SCALE

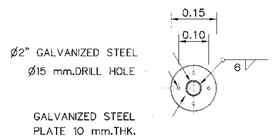

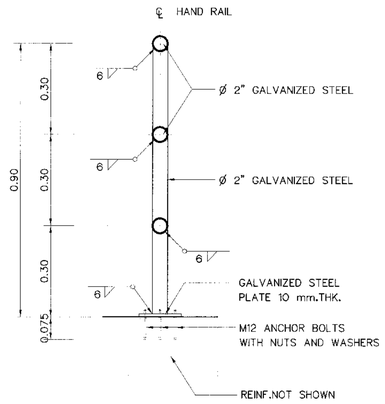

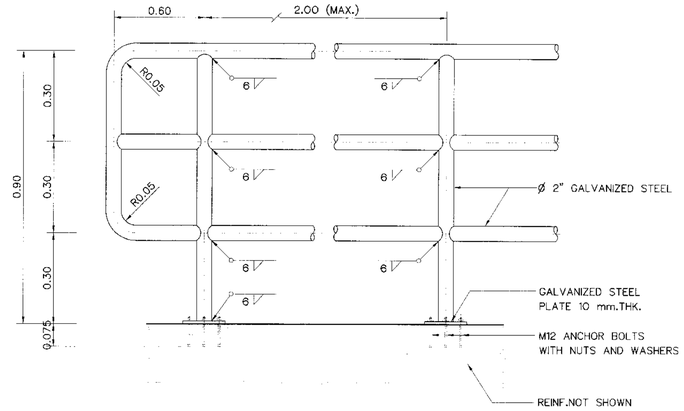

DETAIL OF HANDRAIL

SCALE 1:20

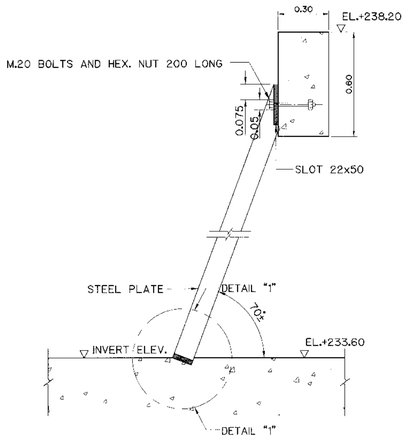

TRASHRACK INSTALLATION

NOT TO SCALE

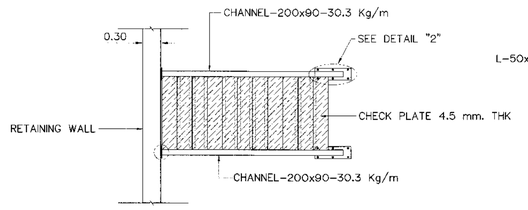

PLAN

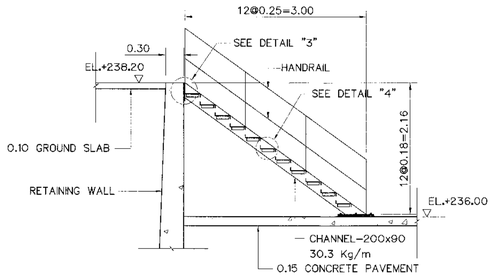

SECTION

NOT TO SCALE

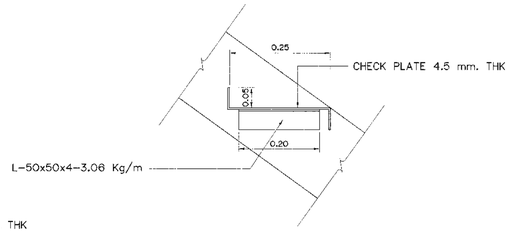

DETAIL "4"

SCALE 1:7.5

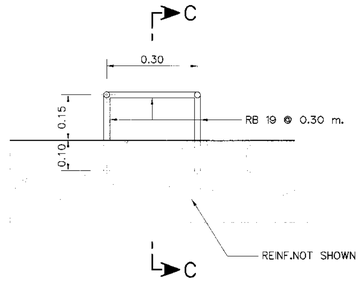

DETAIL OF LADDER RUNG

SCALE 1:20

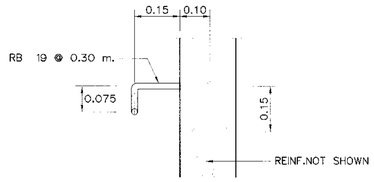

SECTION C – C

SCALE 1:20

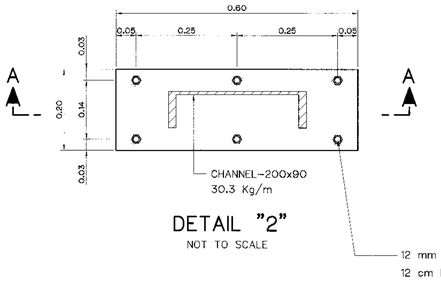

DETAIL "2"

NOT TO SCALE

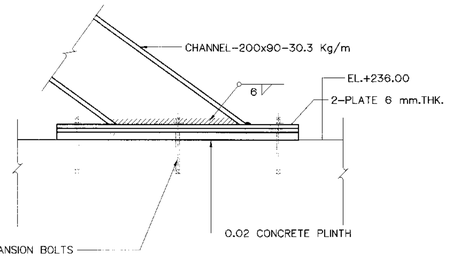

SECTION A–A

NOT TO SCALE

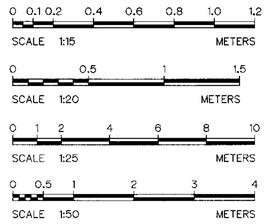

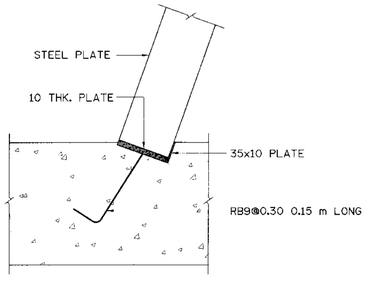

DETAIL "1"

NOT TO SCALE

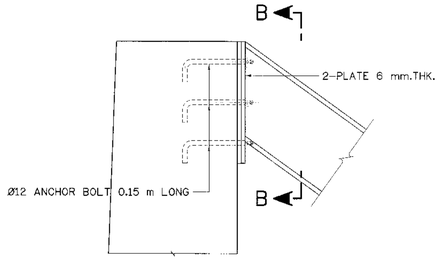

DETAIL "3"

NOT TO SCALE

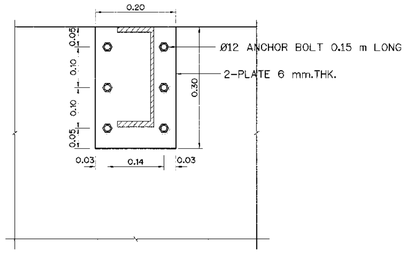

SECTION B–B

NOT TO SCALE

NOTES :

1. ALL DIMENSIONS AND ELEVATIONS ARE IN METER.UNLESS OTHERWISE SHOWN
2. FOR GENERAL NOTES SEE DWG. NO KLP-GN-03
3. WELDING CONNECTION USE 6 mm., UNLESS OTHERWISE SHOWN

NO.	DATE	REVISIONS	CHECKED	APPROVED
3				
2				
1				

CONSULTANTS — DEDE

KINGDOM OF THAILAND
Department of Alternative Energy Development and Efficiency
MINISTRY OF ENERGY

KLONG LAM PLOK HYDROPOWER PROJECT

CIVIL WORKS AND TRANSMISSION LINE
WEIR : INTAKE STRUCTURE
MISCELLANEOUS DETAILS

P&C MANAGEMENT CO.,LTD.

Department of Alternative Energy Development and Efficiency
MINISTRY OF ENERGY

DESIGNED	วิชิต.29074	REVIEWED	
DRAWN		SUBMITTED	
CHECKED	วิชิต.6226	RECOMMENDED	
PROJECT MANAGER	08/03/2559 DATE	APPROVED	

DRAWING NO. KLP-WE-08

SHEET NO. 17 OF 110

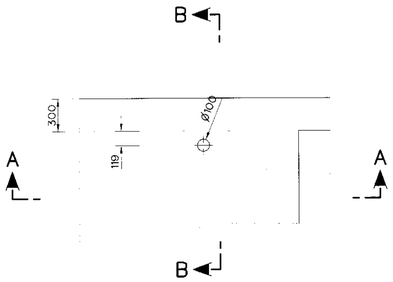

PLAN
NOT TO SCALE

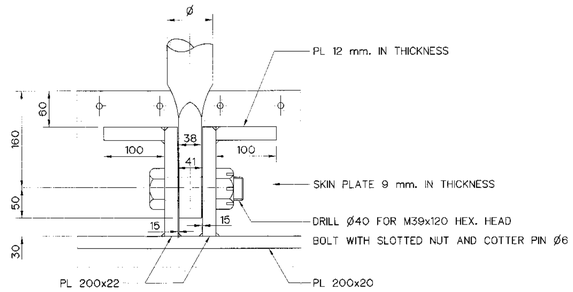

DETAIL "1"
NOT TO SCALE

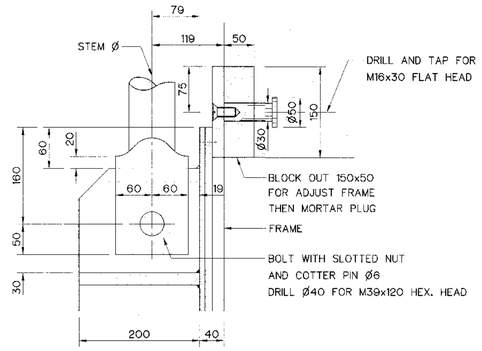

DETAIL "2"
NOT TO SCALE

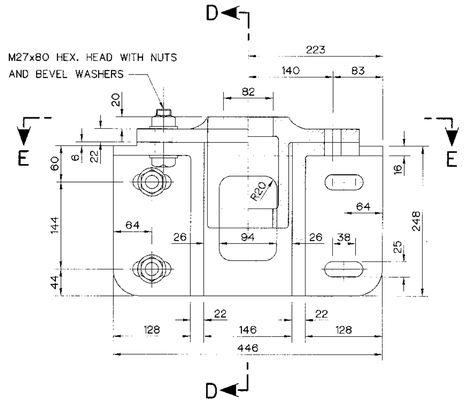

STEM GUIDE
NOT TO SCALE

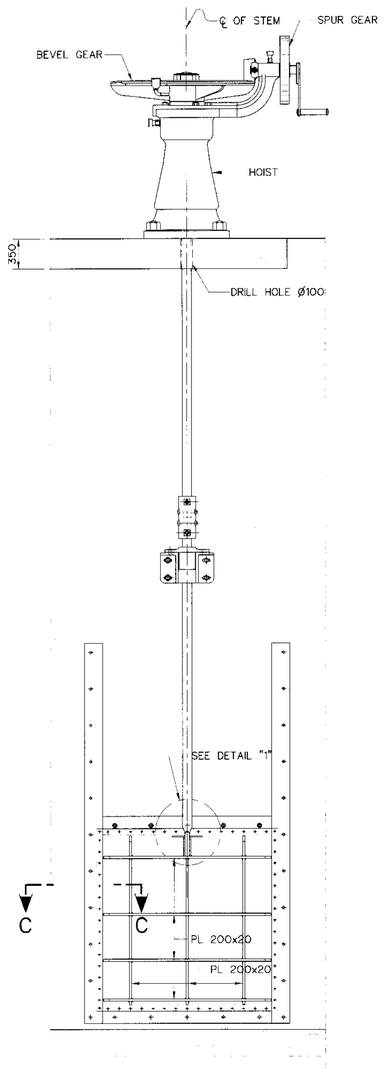

SECTION A–A
NOT TO SCALE

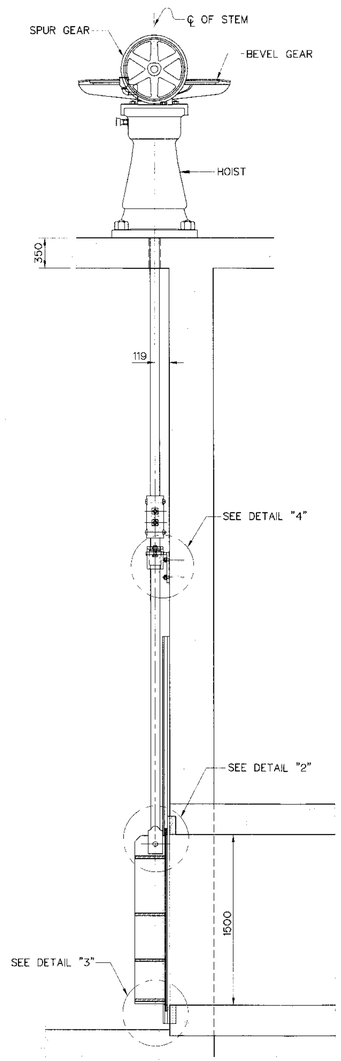

SECTION B–B
NOT TO SCALE

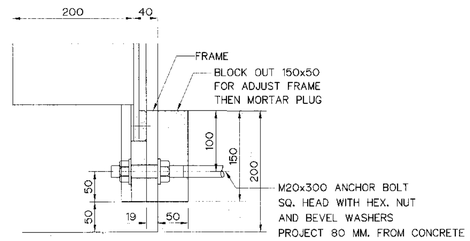

DETAIL "3"
SCALE 1:5

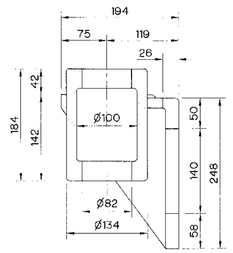

SECTION D–D
SCALE 1:5

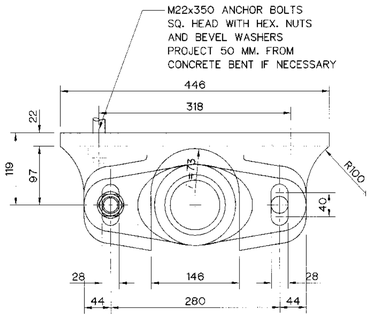

SECTION E–E
SCALE 1:5

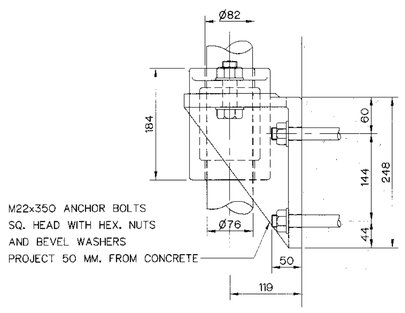

DETAIL "4"
SCALE 1:5

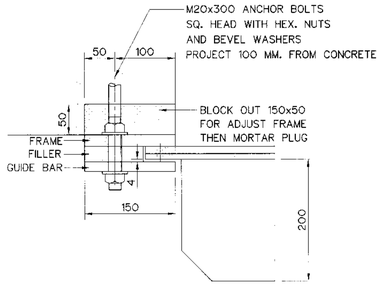

SECTION C–C
SCALE 1:5

NOTE :

1. ALL DIMENSIONS ARE IN MILLIMETERS, AND ELEVATION ARE IN METERS UNLESS OTHERWISE SHOWN.
2. ALL WELDING WILL BE 6 MILLIMETERS, UNLESS OTHERWISE SHOWN.
3. ALL BOLTS AND NUTS USE ASTM A325.
4. ALL STRUCTURAL STEELS ARE JIS G 3101 SS400
5. ALL STAINLESS STEELS PLATES ARE JIS G 4304 SUS 304.
6. THIS DRAWING IS DESIGNED FOR GUIDE LINE ONLY, THE CONTRACTOR HAS TO SUBMITTED SHOP DRAWING TO FIELD ENGINEER FOR APPROVAL

REFERENCE DWGS :

1. WEIR : INTAKE STRUCTURE PLAN AND SECTIONS	KLP–WE–04
2. WEIR : INTAKE STRUCTURE 1.50x1.50 m. VERTICAL GATE (GATE DATAIL)	KLP–WE–10
3. WEIR : PEDESTAL SCREW LIFT CAPACITY 6.5 TONS	KLP–WE–12

NO.	DATE	REVISIONS	CHECKED	APPROVED
3				
2				
1				

CONSULTANTS — DEDE

KINGDOM OF THAILAND
Department of Alternative Energy Development and Efficiency
MINISTRY OF ENERGY

KLONG LAM PLOK HYDROPOWER PROJECT

CIVIL WORKS AND TRANSMISSION LINE
WEIR : INTAKE STRUCTURE
1.50x1.50 m. VERTICAL GATE (GATE INSTALLATION)

P&C MANAGEMENT CO.,LTD.

DESIGNED — 28.29074 — 28.6226
DRAWN
CHECKED — 28.6226
PROJECT MANAGER — 08/03/2559 — DATE

Department of Alternative Energy Development and Efficiency
MINISTRY OF ENERGY
REVIEWED
SUBMITTED
RECOMMENDED
APPROVED

DRAWING NO. KLP–WE–09
SHEET NO. 18 OF 110

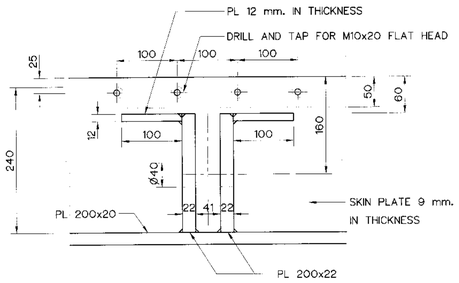

DETAIL "1"
NOT TO SCALE

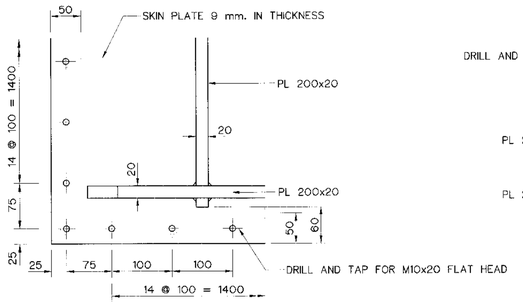

DETAIL "2"
NOT TO SCALE

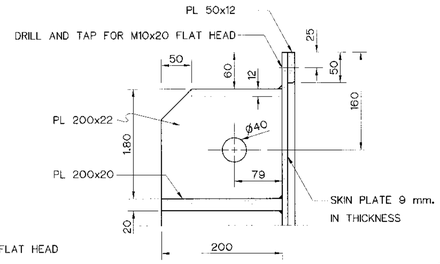

DETAIL "3"
NOT TO SCALE

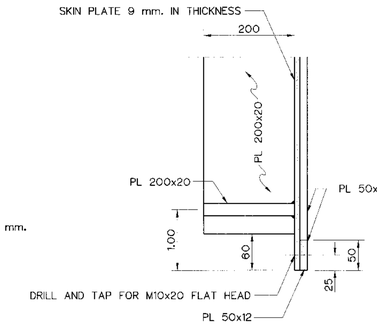

DETAIL "4"
NOT TO SCALE

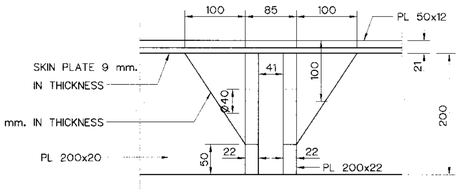

DETAIL "5"
NOT TO SCALE

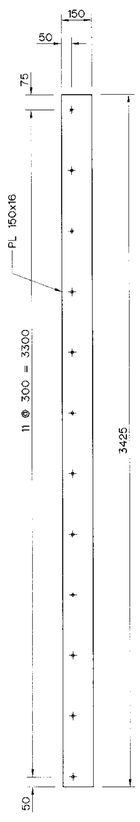

GUIDE BAR
NOT TO SCALE

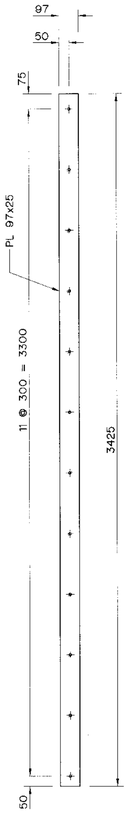

FILLER
NOT TO SCALE

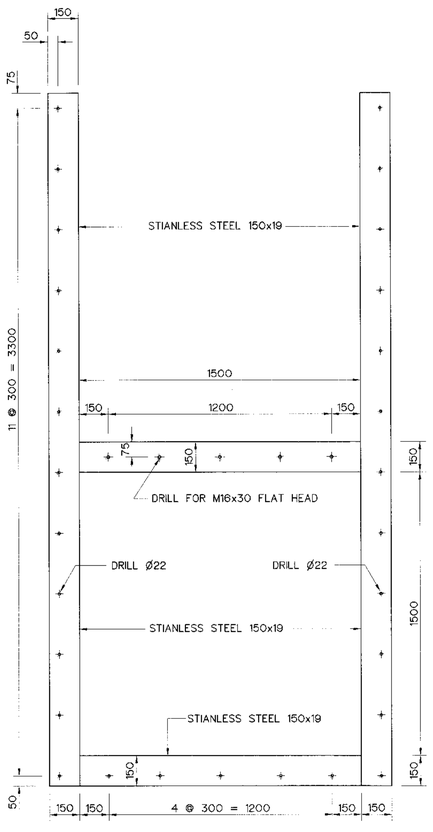

FRAME
NOT TO SCALE

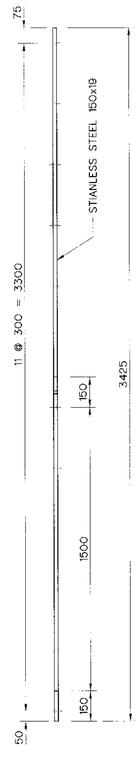

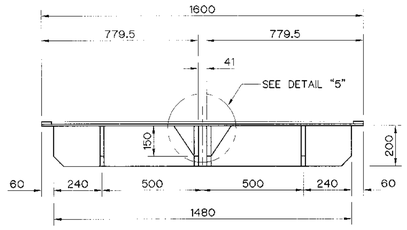

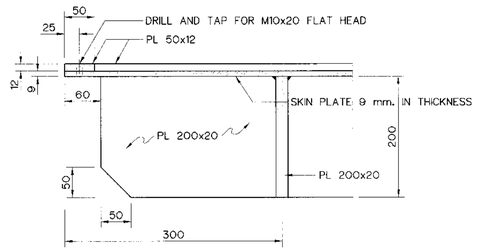

SECTION B–B
NOT TO SCALE

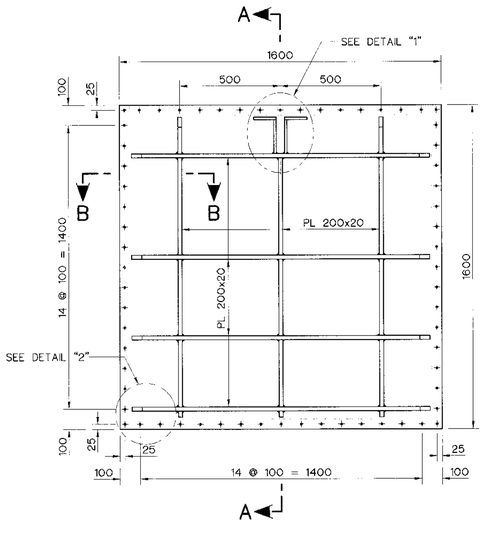

GATE LEAF
NOT TO SCALE

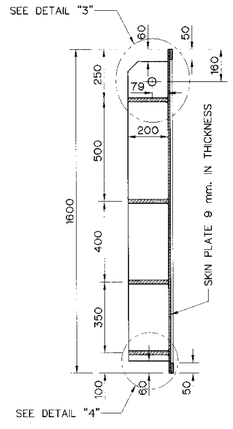

SECTION A–A
NOT TO SCALE

NOTE :

1. ALL DIMENSIONS ARE IN MILLIMETERS, UNLESS OTHERWISE SHOWN.
2. ALL WELDING WILL BE 6 MILLIMETERS, UNLESS OTHERWISE SHOWN.
3. ALL BOLTS AND NUTS USE ASTM A325.
4. ALL STRUCTURAL STEELS ARE JIS G 3101 SS400
5. ALL STAINLESS STEELS PLATES ARE JIS G 4304 SUS 304.
6. THIS DRAWING IS DESIGNED FOR GUIDE LINE ONLY, THE CONTRACTOR HAS TO SUBMITTED SHOP DRAWING TO FIELD ENGINEER FOR APPROVAL

REFERENCE DWGS :

1. WEIR : INTAKE STRUCTURE 1.50x1.50 m. VERTICAL GATE (GATE INSTALLATION) KLP-WE-09
2. WEIR : PEDESTAL SCREW LIFT CAPACITY 6.5 TONS KLP-WE-12

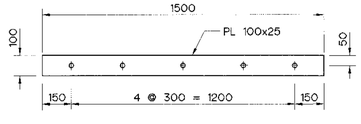

BOTTOM BAR
NOT TO SCALE

NO.	DATE	REVISIONS	CHECKED	APPROVED
3				
2				
1				

CONSULTANTS | DEDE

KINGDOM OF THAILAND
Department of Alternative Energy Development and Efficiency
MINISTRY OF ENERGY

KLONG LAM PLOK HYDROPOWER PROJECT

CIVIL WORKS AND TRANSMISSION LINE
WEIR : INTAKE STRUCTURE
1.50x1.50 m. VERTICAL GATE (GATE DETAIL)

P&C MANAGEMENT CO.,LTD.

Department of Alternative Energy Development and Efficiency MINISTRY OF ENERGY

DESIGNED	RE.29074 RE.6226	REVIEWED	
DRAWN		SUBMITTED	
CHECKED	RE.6226	RECOMMENDED	
PROJECT MANAGER	08/03/2559 DATE	APPROVED	

DRAWING NO. KLP-WE-10
SHEET NO. 19 OF 110

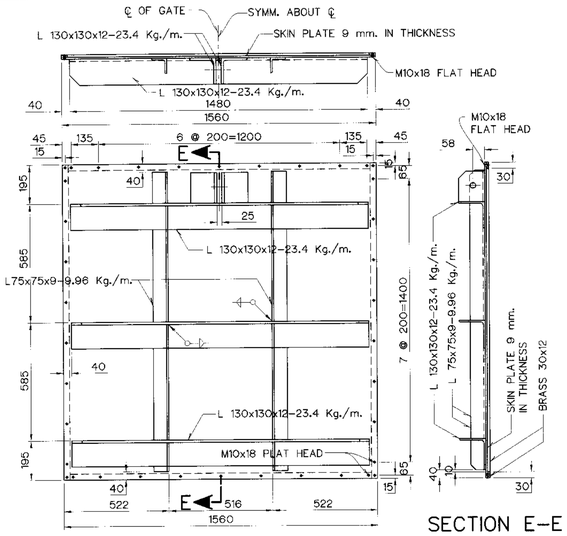

GATE LEAF
NOT TO SCALE

SECTION E-E
NOT TO SCALE

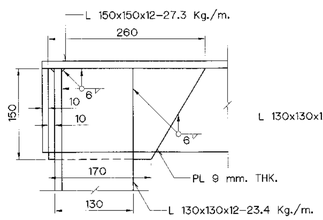

DETAIL "3"
NOT TO SCALE

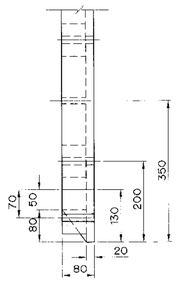

DETAIL "2"
NOT TO SCALE

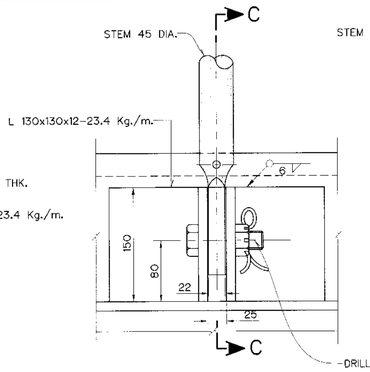

DETAIL "4"
NOT TO SCALE

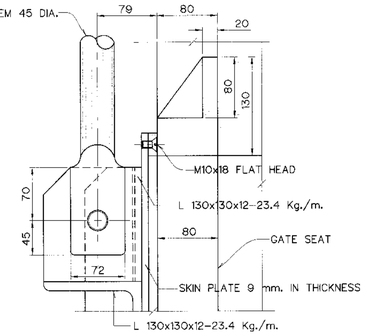

SECTION C-C
NOT TO SCALE

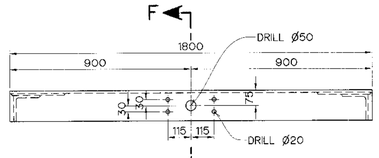

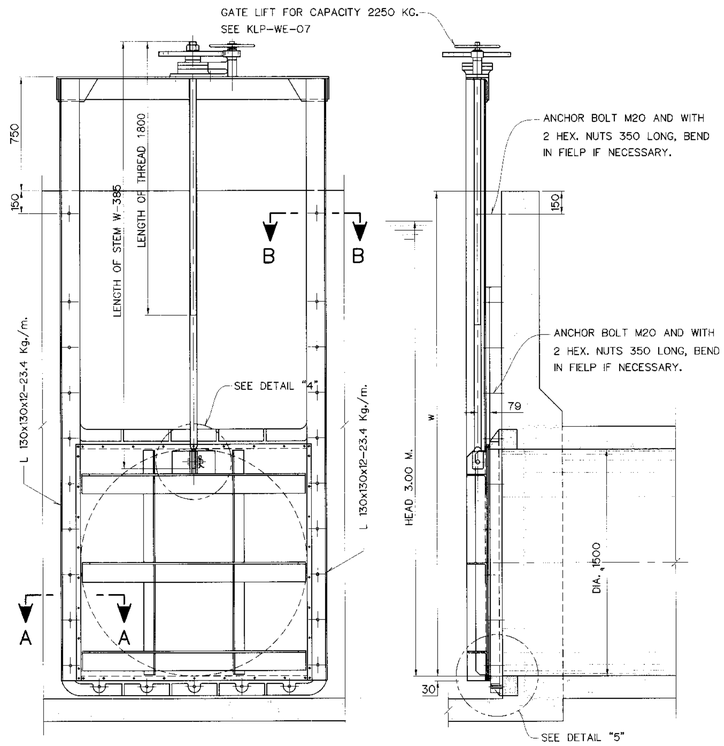

ASSEMBLY & GENERAL INATALLATION
NOT TO SCALE

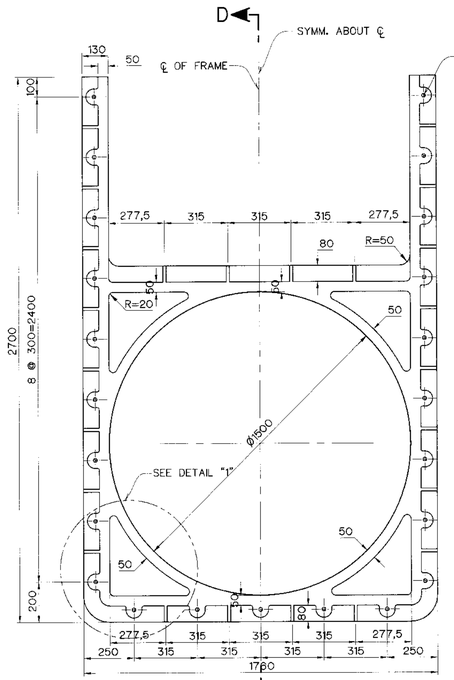

GATE SEAT
NOT TO SCALE

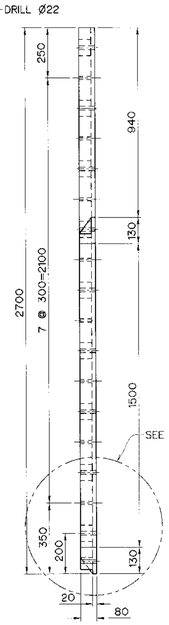

SECTION D-D
NOT TO SCALE

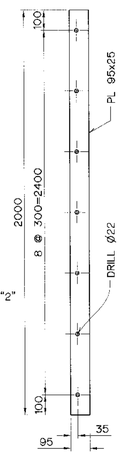

FILLER
NOT TO SCALE

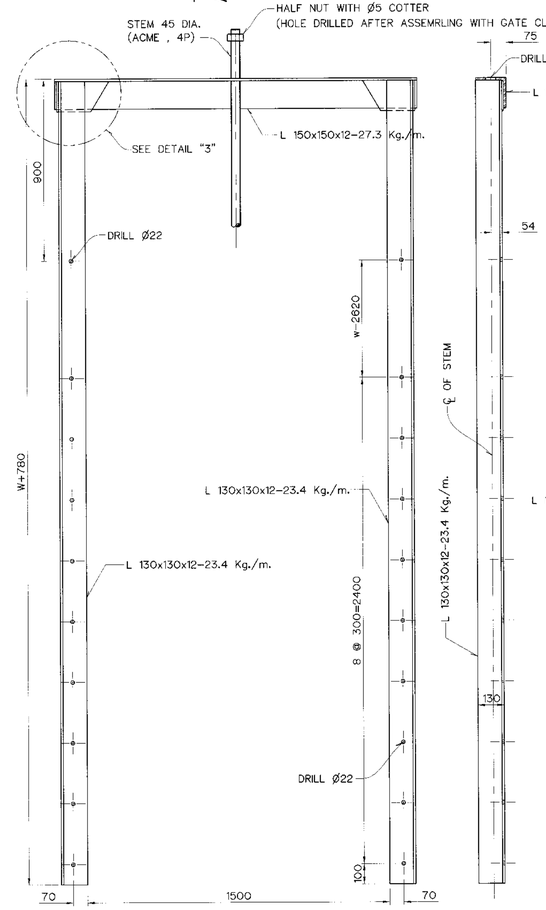

FRAME
NOT TO SCALE

SECTION F-F
NOT TO SCALE

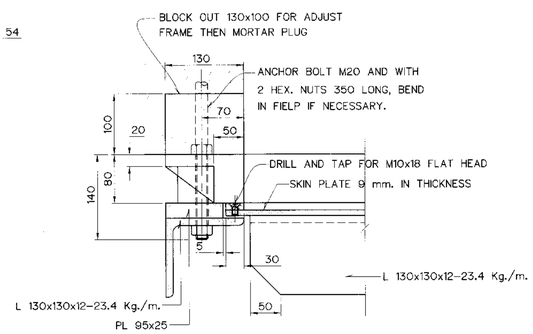

SECTION A-A
NOT TO SCALE

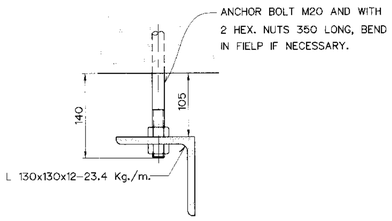

SECTION B-B
NOT TO SCALE

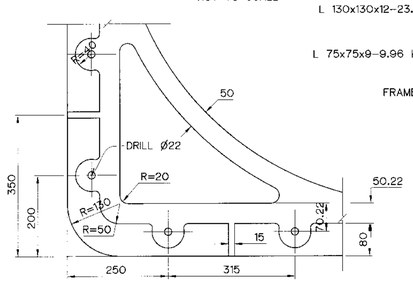

DETAIL "1"
NOT TO SCALE

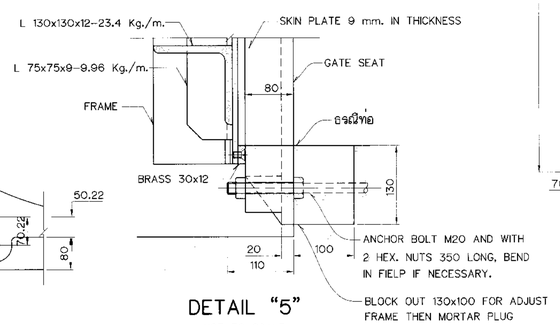

DETAIL "5"
NOT TO SCALE

NOTE :

1. ALL DIMENSIONS ARE IN MILLIMETERS, UNLESS OTHERWISE SHOWN.
2. ALL WELDING WILL BE 6 MILLIMETERS, UNLESS OTHERWISE SHOWN.
3. ALL BOLTS AND NUTS USE ASTM A325.
4. ALL STRUCTURAL STEELS ARE JIS G 3101 SS400
5. ALL STAINLESS STEELS PLATES ARE JIS G 4304 SUS 304.

NO.	DATE	REVISIONS	CHECKED	APPROVED
3				
2				
1				
	CONSULTANTS		DEDE	

KINGDOM OF THAILAND
Department of Alternative Energy Development and Efficiency
MINISTRY OF ENERGY

KLONG LAM PLOK HYDROPOWER PROJECT

CIVIL WORKS AND TRANSMISSION LINE
WEIR : INTAKE STRUCTURE
DIA. 1.50 m. VERTICAL GATE

P&C MANAGEMENT CO.,LTD.

DESIGNED สิน.29074 สิน.6226
DRAWN
CHECKED สิน.6226
PROJECT MANAGER 08/03/2559 DATE

Department of Alternative Energy Development and Efficiency
MINISTRY OF ENERGY
REVIEWED
SUBMITTED
RECOMMENDED
APPROVED

DRAWING NO. KLP-WE-11
SHEET NO. 20 OF 110

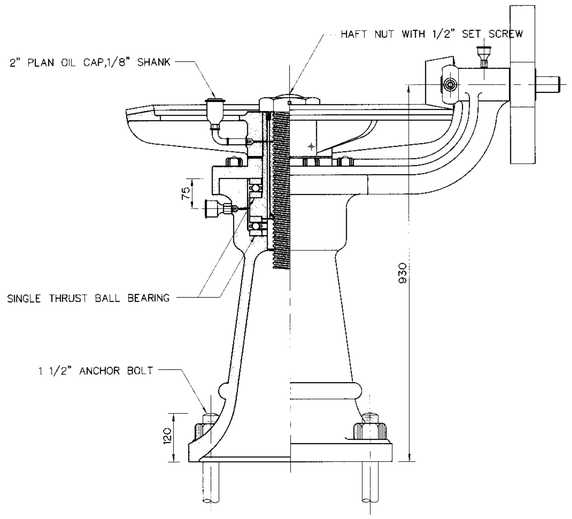

ASSEMBLY
SCALE 1 : 7.5

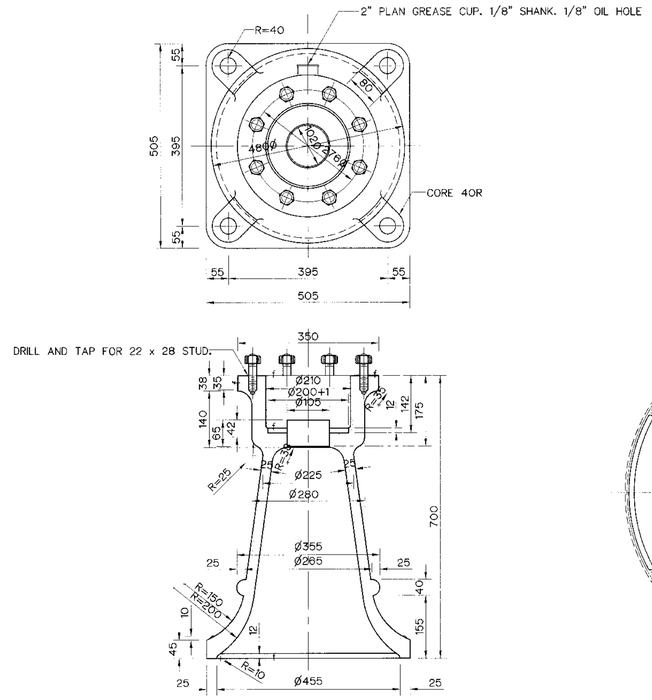

PEDESTAL
CAST IRON
SCALE 1 : 7.5

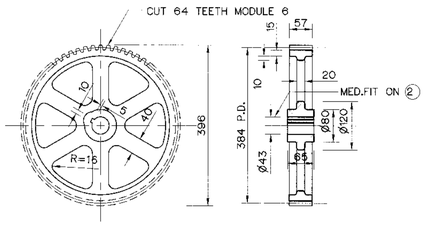

SPUR GEAR
SCALE 1 : 7.5

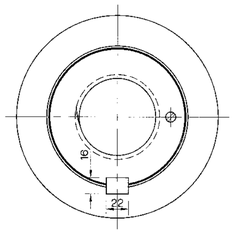

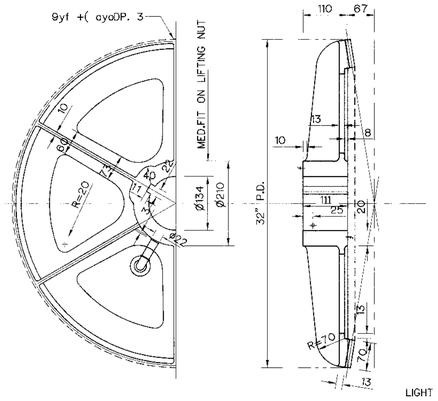

BEVEL GEAR
CAST IRON
SCALE 1 : 7.5

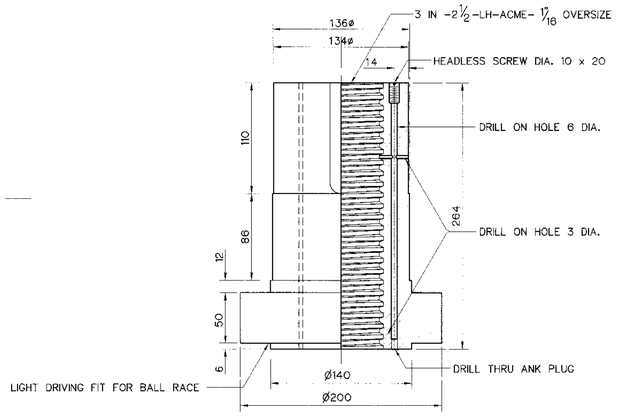

LIFTING NUT
PHOSPHOR BRONZE
SCALE 1 : 3

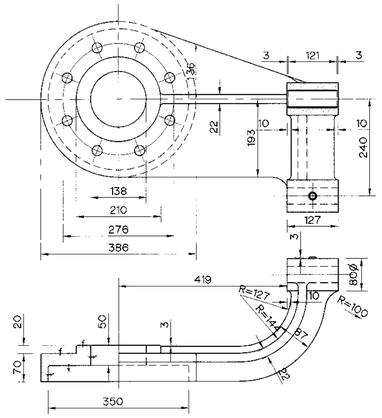

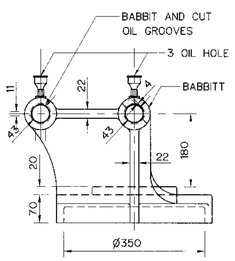

GAP AND BEARING
CAST IRON
SCALE 1:7.5

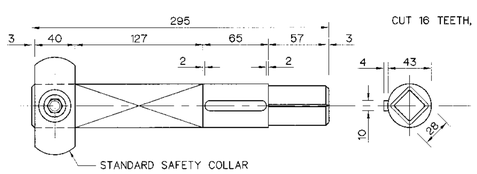

BEVEL PINION SHAFT
COLD ROLLED STEEL
SCALE 1 : 3

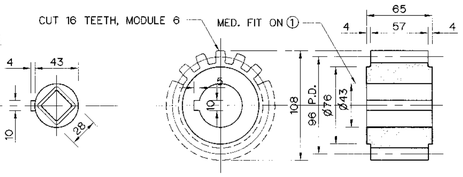

SPUR PINION
CAST IRON
SCALE 1 : 3

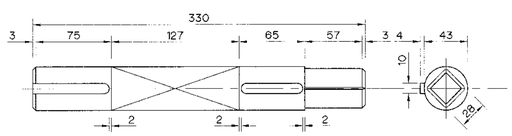

BEVEL GEAR SHAFT
COLD ROLLED STEEL
SCALE 1 : 3

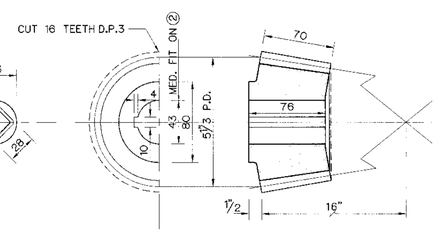

BEVEL PINION
CAST IRON
SCALE 1 : 3

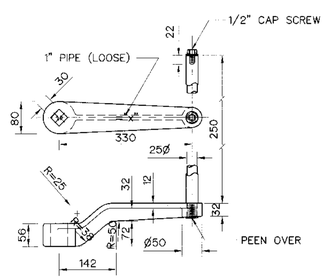

CRANK ARM
CAST IRON
SCALE 1 : 7.5

NOTES :

1. ALL DIMENSIONS ARE IN MILLIMETER, UNLESS OTHERWISE SHOWN.
2. THIS DRAWING IS DESIGNED FOR GUIDE LINE ONLY, THE CONTRACTOR HAS TO SUBMITTED SHOP DRAWING TO FIELD ENGINEER FOR APPROVAL

0 0.05 0.1 0.2 0.25
SCALE 1:3 METERS

0 0.1 0.2 0.3 0.4 0.5 0.6
SCALE 1:7.5 METERS

NO.	DATE	REVISIONS	CHECKED	APPROVED
3				
2				
1				
	CONSULTANTS		DEDE	

KINGDOM OF THAILAND
Department of Alternative Energy Development and Efficiency
MINISTRY OF ENERGY

KLONG LAM PLOK HYDROPOWER PROJECT

CIVIL WORKS AND TRANSMISSION LINE
WEIR
PEDESTAL SCREW LIFT CAPACITY 6.5 TONS

P&C MANAGEMENT CO.,LTD.

Department of Alternative Energy Development and Efficiency
MINISTRY OF ENERGY

DESIGNED ณัฐ.29074 ณัฐ.6226
DRAWN
CHECKED ณัฐ.6226
PROJECT MANAGER 08/03/2559 DATE

REVIEWED
SUBMITTED
RECOMMENDED
APPROVED P. Hanyuth

DRAWING NO. KLP-WE-12
SHEET NO. 21 OF 110

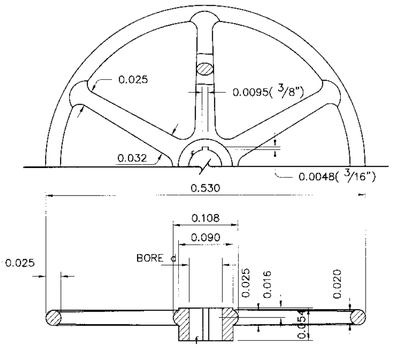

53-CM. DIA. HAND WHEEL

NOT TO SCALE

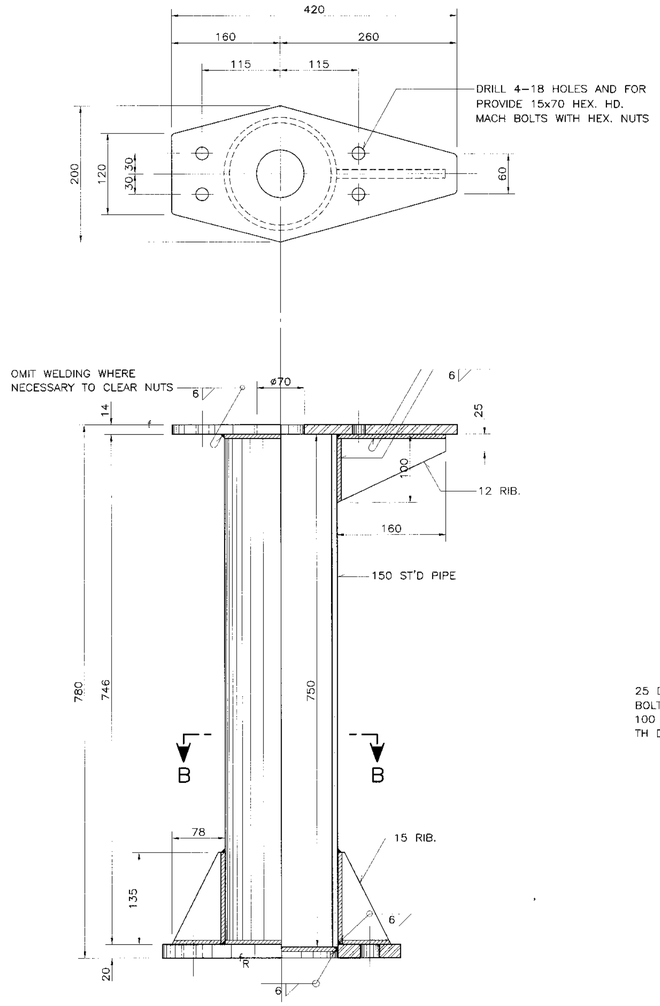

PEDESTAL

NOT TO SCALE

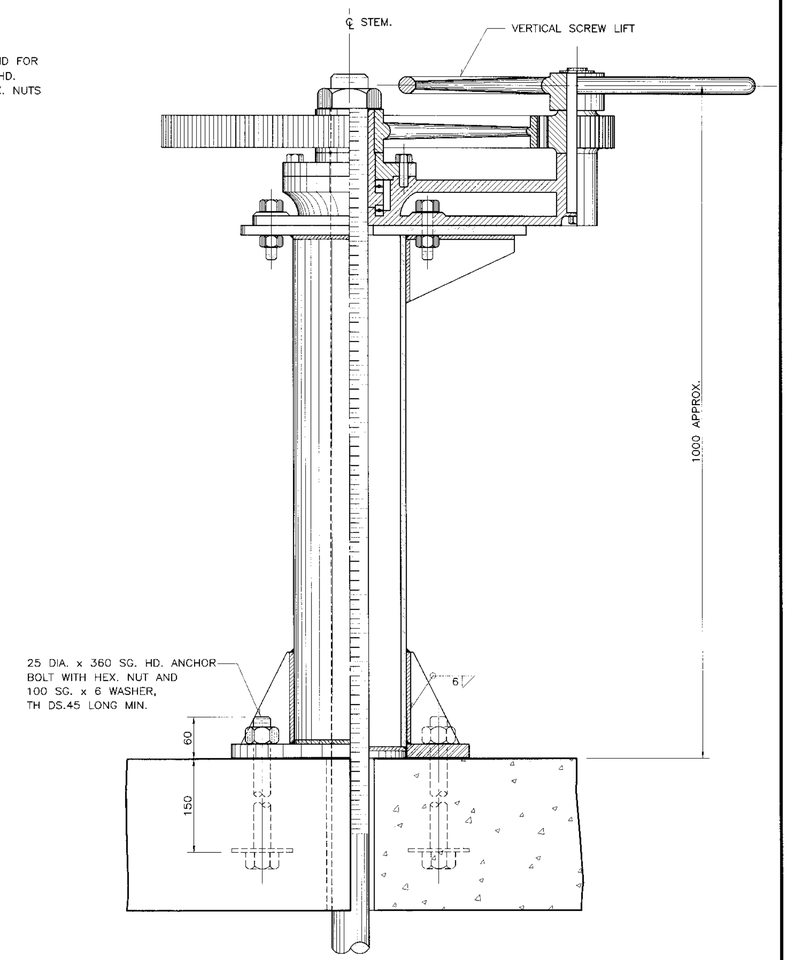

INSTALLATION

NOT TO SCALE

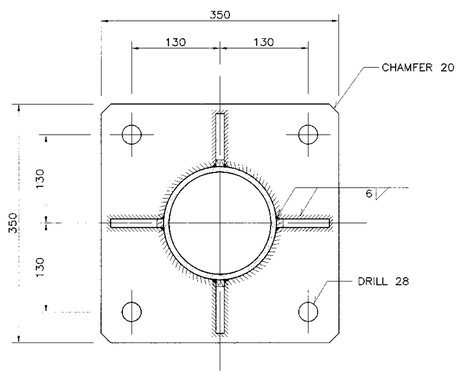

SECTION B-B

NOT TO SCALE

NOTES :

1. ALL DIMENSIONS ARE IN MILLIMETER, UNLESS OTHERWISE SHOWN.

NO.	DATE	REVISIONS	CHECKED	APPROVED
3				
2				
1				
	CONSULTANTS		DEDE	

KINGDOM OF THAILAND
Department of Alternative Energy Development and Efficiency
MINISTRY OF ENERGY

KLONG LAM PLOK HYDROPOWER PROJECT

CIVIL WORKS AND TRANSMISSION LINE
WEIR
GATE-LIFT PEDESTAL AND HAND WHEEL

P&C MANAGEMENT CO.,LTD.

Department of Alternative Energy Development and Efficiency
MINISTRY OF ENERGY

DESIGNED 28.29074 28.6226
DRAWN
CHECKED 28.6226
PROJECT MANAGER 08/03/2559 DATE

REVIEWED
SUBMITTED
RECOMMENDED
APPROVED

DRAWING NO. KLP-WE-13
SHEET NO. 22 OF 110

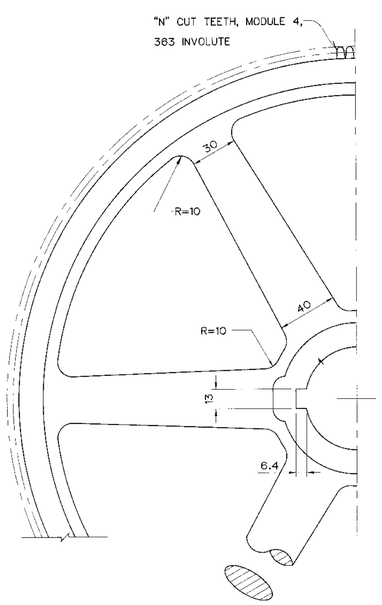

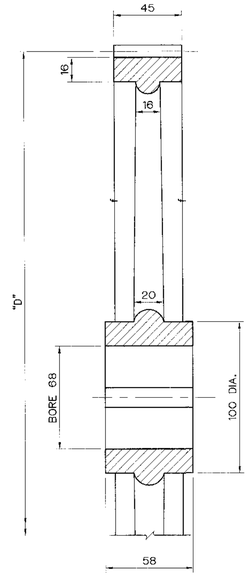

1

SPUR GEAR

CAST IRON

NOT TO SCALE

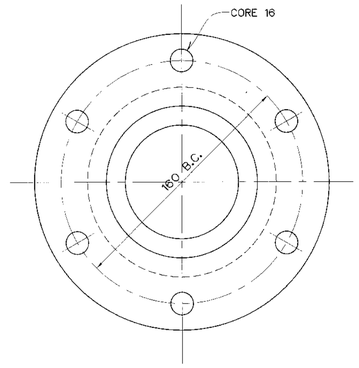

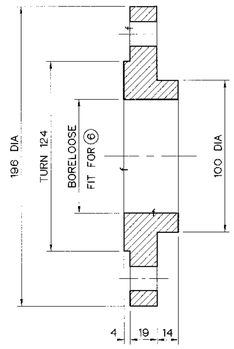

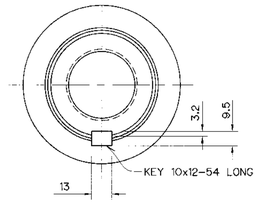

4

COVER PLATE

CAST IRON

NOT TO SCALE

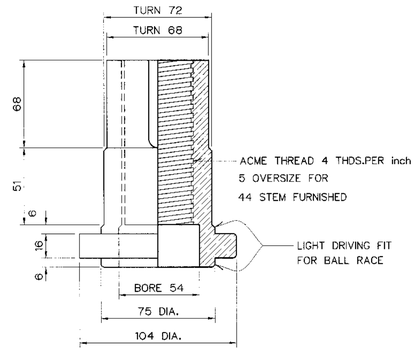

6

LIFTING NUT

BRONZE

NOT TO SCALE

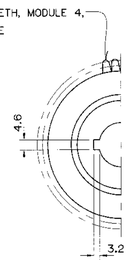

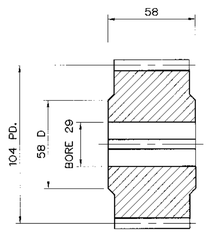

2

PINION

CAST IRON

NOT TO SCALE

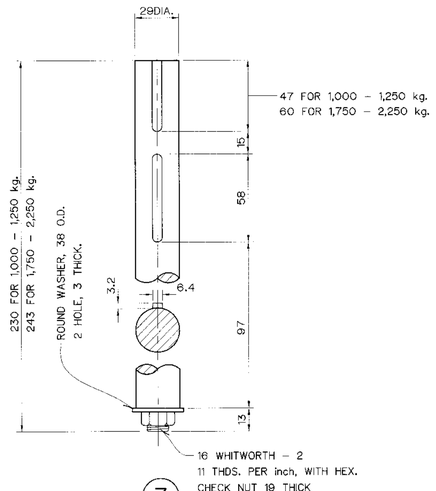

3

PINION SHAFT

MILD STEEL

NOT TO SCALE

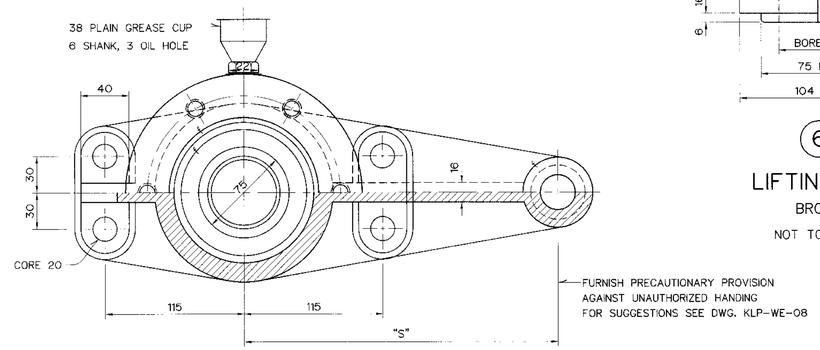

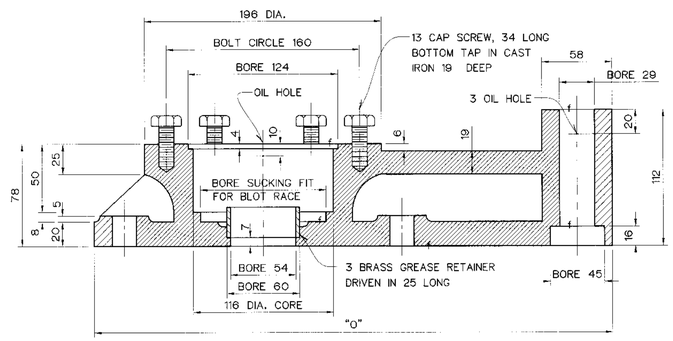

5

BASE

CAST IRON

NOT TO SCALE

NOTES :

1. ALL DIMENSIONS ARE IN MILLIMETERS EXCEPT AS SHOWN
2. SINGLE – THRUST BALL BEARING S.K.F. 51115
   DYNAMIC CAPACITY = 8150 LBS. (3,700 kg.)
   BORE = 75
   OUTSIDE DIAMETER = 100
   HEIGHT = 19
3. VERTICAL SCREW LIFT LOCKING DEVICE DETAILS KLP-WE-04

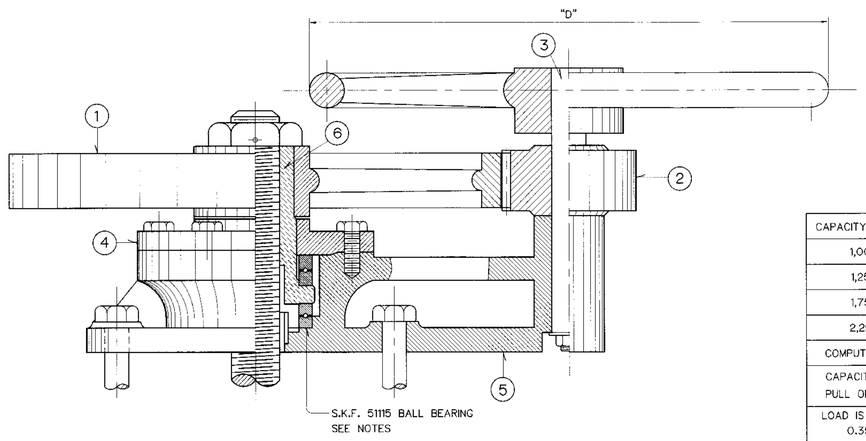

ASSEMBLY

NOT TO SCALE

CAPACITY (Kg.)	"N"	"D"	"S"	"O"	"D1"
1,000	104	416	260	429	300
1,250	104	416	260	429	380
1,750	130	520	312	481	450
2,250	143	572	338	502	530

COMPUTATION NO. SCREW LIFT I

CAPACITY IS BASED ON A HANDWHEEL PULL OF 9 KG. (4.5 KG.PER HAND)

LOAD IS EQUAL TO 0.35xWATER PRESSUREON GATE LEAL + WEIGHT OF GATE AND STEM.

NO.	DATE	REVISIONS	CHECKED	APPROVED
3				
2				
1				
	CONSULTANTS		DEDE	

KINGDOM OF THAILAND
Department of Alternative Energy Development and Efficiency
MINISTRY OF ENERGY

KLONG LAM PLOK HYDROPOWER PROJECT

CIVIL WORKS AND TRANSMISSION LINE

WEIR

VERTICAL SCREW-LIFT CAPACITY 2,250 KG.

P&C MANAGEMENT CO.,LTD.

Department of Alternative Energy Development and Efficiency
MINISTRY OF ENERGY

DESIGNED	28.29074	28.6226	REVIEWED
DRAWN			SUBMITTED
CHECKED		28.6226	RECOMMENDED
PROJECT MANAGER	08/03/2559 DATE		APPROVED

DRAWING NO. KLP-WE-14

SHEET NO. 23 OF 110

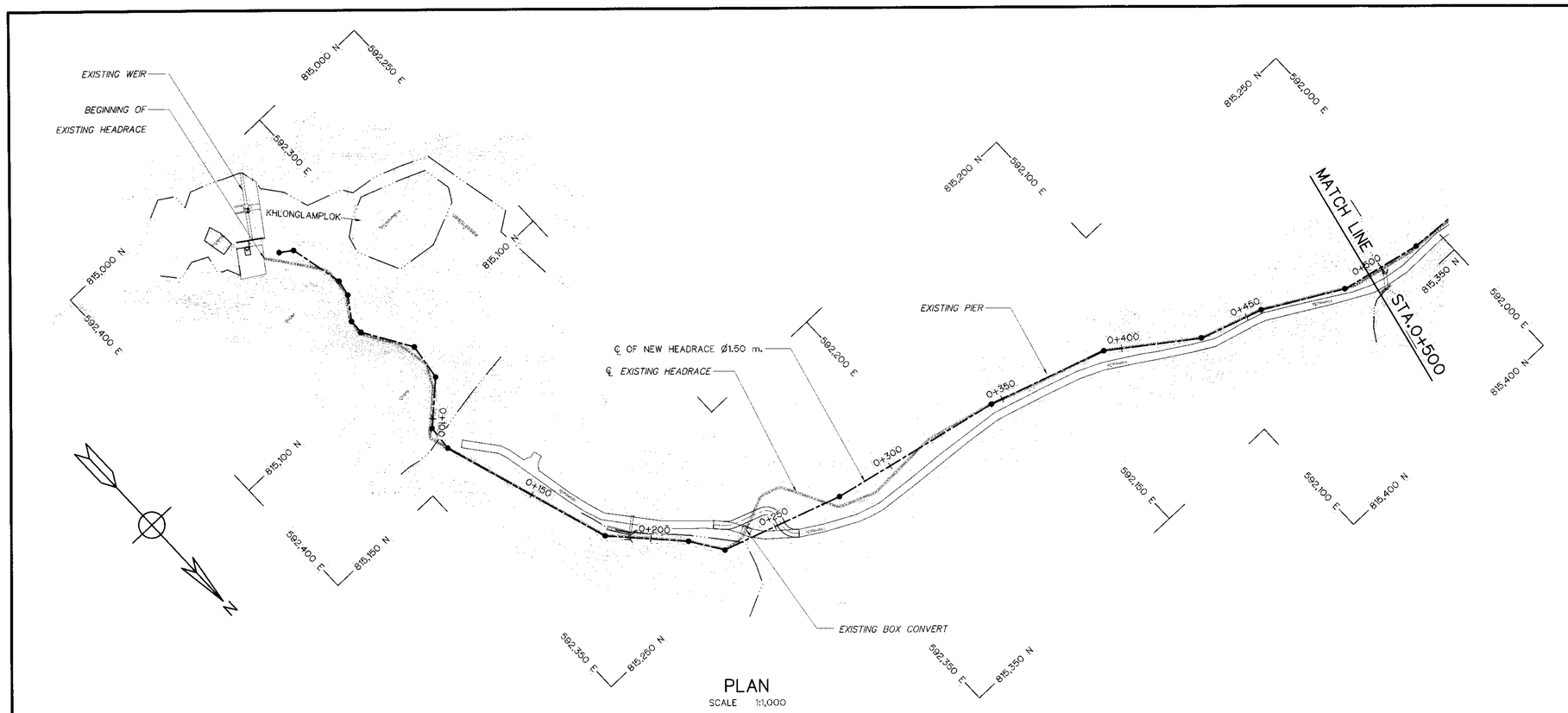

PLAN
SCALE 1:1,000

NOTES :

1. ALL DIMENSIONS AND ELEVATIONS (M.S.L.) ARE IN METERS. UNLESS OTHERWISE SHOWN.
2. SYMBOLS, ABBREVIATIONS AND GENERAL NOTES SEE DWG. NO. KLP-GN-03
3. REMOVE ALL EXISTING HEADRACE
4. EXISTING PIERS SHOULD BE DEMOLISHED AS FOLLOWS.
   4.1 ON HEADRACE ALIGNMENT DEMOLISH WHOLLY.
   4.2 OTHERWISE DEMOLISH PART OF STRUCTURES WHICH ABOVE GROUND SURFACE.

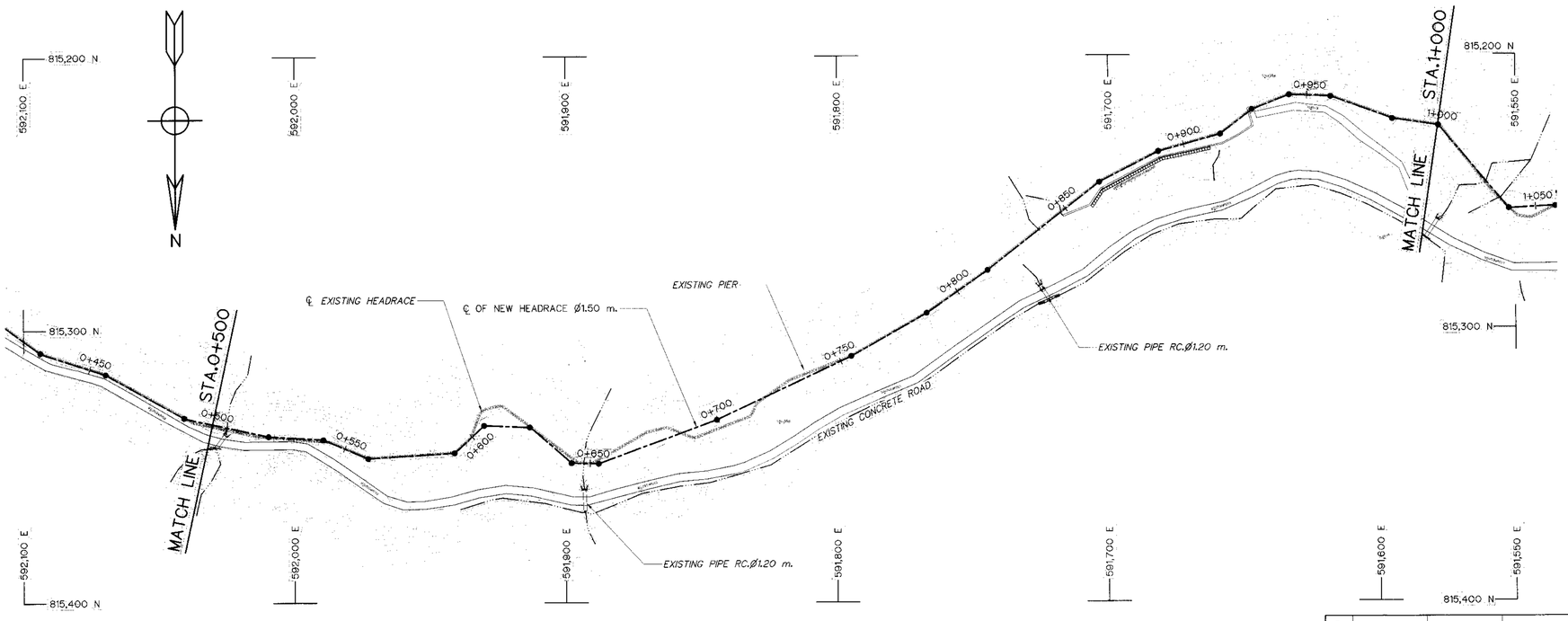

PLAN
SCALE 1:1,000

0 10 20 40 60 80
SCALE 1:1,000 METERS

NO.	DATE	REVISIONS	CHECKED	APPROVED
3				
2				
1				

CONSULTANTS | DEDE

KINGDOM OF THAILAND
Department of Alternative Energy Development and Efficiency
MINISTRY OF ENERGY

KLONG LAM PLOK HYDROPOWER PROJECT

CIVIL WORKS AND TRANSMISSION LINE
HEADRACE
PLAN OF DEMOLITION WORK, STA. 0+000 TO STA. 1+000

P&C MANAGEMENT CO.,LTD.

Department of Alternative Energy Development and Efficiency
MINISTRY OF ENERGY

DESIGNED	ส.ต.29074	ส.ต.6226
DRAWN		
CHECKED		ส.ต.6226
PROJECT MANAGER		08/03/2559 DATE

REVIEWED
SUBMITTED
RECOMMENDED
APPROVED

DRAWING NO. KLP-HR-01
SHEET NO. 24 OF 110

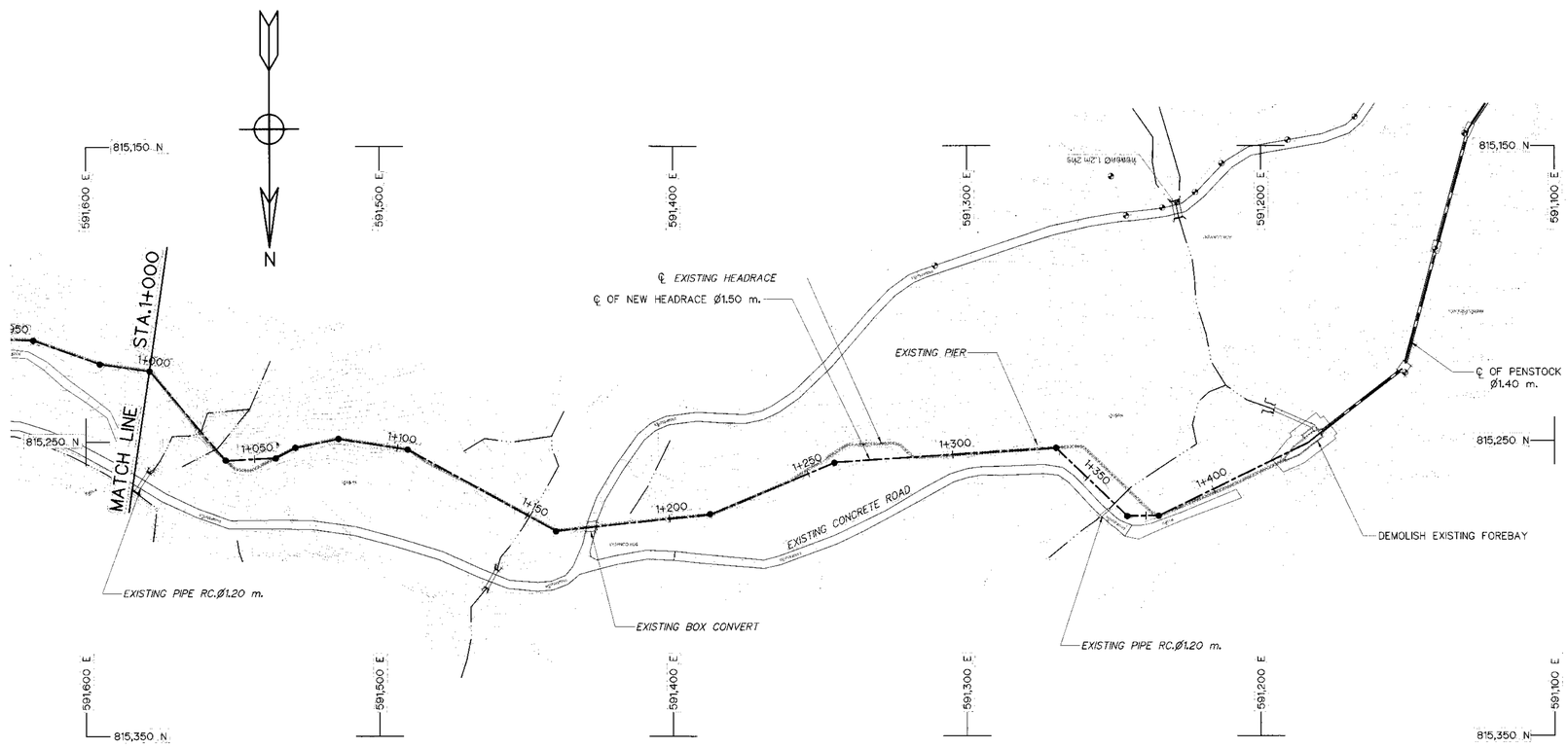

PLAN

SCALE 1:1,000

NOTES :

1. ALL DIMENSIONS AND ELEVATIONS (M.S.L.) ARE IN METERS. UNLESS OTHERWISE SHOWN.
2. SYMBOLS, ABBREVIATIONS AND GENERAL NOTES SEE DWG. NO. KLP-GN-03
3. REMOVE ALL EXISTING HEADRACE
4. EXISTING PIERS SHOULD BE DEMOLISHED AS FOLLOWS.
   4.1 ON HEADRACE ALIGNMENT DEMOLISH WHOLLY.
   4.2 OTHERWISE DEMOLISH PART OF STRUCTURES WHICH ABOVE GROUND SURFACE.

0 10 20 40 60 80

SCALE 1:1,000 METERS

KINGDOM OF THAILAND
Department of Alternative Energy Development and Efficiency
MINISTRY OF ENERGY

KLONG LAM PLOK HYDROPOWER PROJECT

CIVIL WORKS AND TRANSMISSION LINE
HEADRACE
PLAN OF DEMOLITION WORK, STA. 1+000 TO STA. 1+459.506

NO.	DATE	REVISIONS	CHECKED	APPROVED
3				
2				
1				

CONSULTANTS | DEDE

P&C MANAGEMENT CO.,LTD.

DESIGNED วิบ.29074 ศิ.8226
DRAWN
CHECKED ศิ.8226
PROJECT MANAGER 08/03/2559 DATE

Department of Alternative Energy Development and Efficiency
MINISTRY OF ENERGY

REVIEWED
SUBMITTED
RECOMMENDED
APPROVED P. Hansale

DRAWING NO. KLP-HR-02
SHEET NO. 25 OF 110

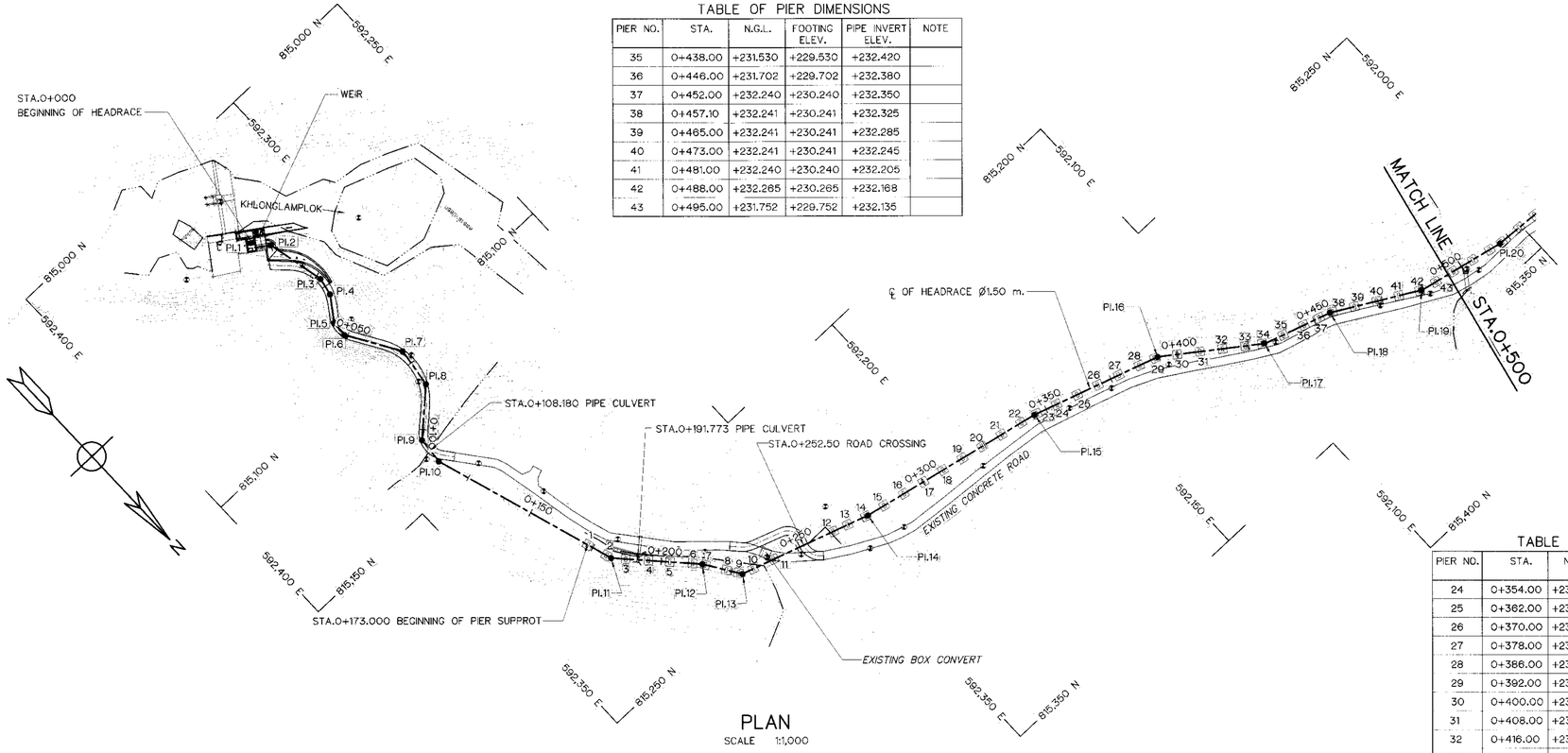

PLAN

SCALE 1:1,000

TABLE OF PIER DIMENSIONS

PIER NO.	STA.	N.G.L.	FOOTING ELEV.	PIPE INVERT ELEV.	NOTE
35	0+438.00	+231.530	+229.530	+232.420	
36	0+446.00	+231.702	+229.702	+232.380	
37	0+452.00	+232.240	+230.240	+232.350	
38	0+457.10	+232.241	+230.241	+232.325	
39	0+465.00	+232.241	+230.241	+232.285	
40	0+473.00	+232.241	+230.241	+232.245	
41	0+481.00	+232.240	+230.240	+232.205	
42	0+488.00	+232.265	+230.265	+232.168	
43	0+495.00	+231.752	+229.752	+232.135	

HORIZONTAL CURVE OF HEADRACE

NO. PI.	COORDINATE OF PI.		PI. TO PI.	DEFLECTION ANGLE (△)	PI. STA.	BEARING
	N	E	(m)	(° – ' – ")	(km)	(N/S ° – ' – " E/W)
PI.1	815,041.962	592,329.225	–	–	0+000.000	–
PI.2	815,045.138	592,324.588	5.620	42°– 52'– 16.47"	0+005.620	N 55°– 35'–30.33" W
PI.3	815,065.755	592,319.934	21.136	24°– 04'– 30.97"	0+026.756	N 12°– 43'– 13.86" W
PI.4	815,071.900	592,321.168	6.268	24°– 03'– 58.27"	0+033.024	N 11°– 21'– 17.11" E
PI.5	815,080.176	592,327.054	10.156	33°– 31'– 04.51"	0+043.180	N 35°– 25'– 15.38" E
PI.6	815,085.774	592,327.240	5.601	33°– 30'– 59.62"	0+048.781	N 01°– 54'– 10.87" E
PI.7	815,103.765	592,316.166	21.126	39°– 23'– 08.39"	0+069.907	N 31°– 36'–48.76"W
PI.8	815,117.737	592,318.073	14.102	39°– 23'– 01.20"	0+084.009	N07°– 46'– 19.83" E
PI.9	815,131.082	592,332.462	19.625	42°– 35'– 10.90"	0+103.634	N47°– 09'–20.83" E
PI.10	815,140.704	592,333.231	9.653	22°– 17'– 35.84"	0+113.287	N04°– 34'–09.93" E
PI.11	815,206.552	592,312.186	69.129	25°– 25'– 45.91"	0+182.416	N 17°– 43'– 25.91" W
PI.12	815,230.003	592,290.200	32.146	09°– 50'– 43.16"	0+214.562	N 43°– 09'– 11.82" W
PI.13	815,241.994	592,282.321	14.348	38°– 25'– 03.47"	0+228.910	N 33°– 18'– 28.66"W
PI.14	815,257.176	592,236.346	48.417	06°– 14'– 50.45"	0+277.327	N 71°– 43'– 32.13" W
PI.15	815,271.366	592,169.742	68.099	05°– 57'– 25.72"	0+345.426	N 77°– 58'–22.58" W
PI.16	815,286.098	592,124.359	47.714	17°– 56'– 04.34"	0+393.140	N 72°– 00'–56.86"W
PI.17	815,308.369	592,093.614	37.964	18°– 02'– 49.34"	0+431.104	N 54°– 04'–52.52" W
PI.18	815,316.089	592,069.672	25.156	11°– 12'– 39.17"	0+456.260	N 72°– 07'–41.86" W
PI.19	815,332.331	592,040.470	33.415	16°– 54'– 59.98"	0+489.675	N60°– 55'–02.70" W

TABLE OF PIER DIMENSIONS

PIER NO.	STA.	N.G.L.	FOOTING ELEV.	PIPE INVERT ELEV.	NOTE
24	0+354.00	+232.601	+230.601	+232.840	
25	0+362.00	+232.559	+230.559	+232.800	
26	0+370.00	+232.565	+230.565	+232.760	
27	0+378.00	+232.472	+230.472	+232.720	
28	0+386.00	+232.642	+230.642	+232.680	
29	0+392.00	+232.603	+230.603	+232.650	
30	0+400.00	+232.759	+230.759	+232.610	
31	0+408.00	+232.711	+230.711	+232.570	
32	0+416.00	+232.562	+230.562	+232.530	
33	0+424.00	+232.609	+230.609	+232.490	
34	0+430.00	+232.260	+230.260	+232.460	

TABLE OF PIER DIMENSIONS

PIER NO.	STA.	N.G.L.	FOOTING ELEV.	PIPE INVERT ELEV.	NOTE
1	0+173.00	+234.481	+234.481	+233.454	
2	0+180.50	+233.658	+231.658	+233.439	
3	0+187.50	+233.479	+231.479	+233.425	
4	0+195.50	+233.472	+231.472	+233.409	
5	0+203.00	+233.573	+231.573	+233.394	
6	0+211.00	+233.573	+231.573	+233.378	
7	0+215.50	+233.573	+231.573	+233.369	
8	0+223.00	+233.703	+231.703	+233.354	
9	0+227.30	+233.793	+231.793	+233.345	
10	0+233.00	+234.000	+232.000	+233.334	
11	0+241.00	+235.312	+233.312	+233.318	
12	0+264.00	+235.312	+233.312	+233.272	
13	0+269.00	+234.382	+232.382	+233.261	
14	0+276.00	+233.378	+231.378	+233.228	
15	0+284.00	+232.796	+230.796	+233.190	
16	0+292.00	+232.472	+230.472	+233.150	
17	0+300.00	+232.484	+230.484	+233.110	
18	0+308.00	+232.426	+230.423	+233.070	
19	0+316.00	+232.426	+230.426	+233.070	
20	0+324.00	+232.832	+230.832	+232.990	
21	0+332.00	+232.739	+230.739	+232.950	
22	0+340.00	+232.679	+230.679	+232.910	
23	0+346.00	+232.655	+230.655	+232.878	

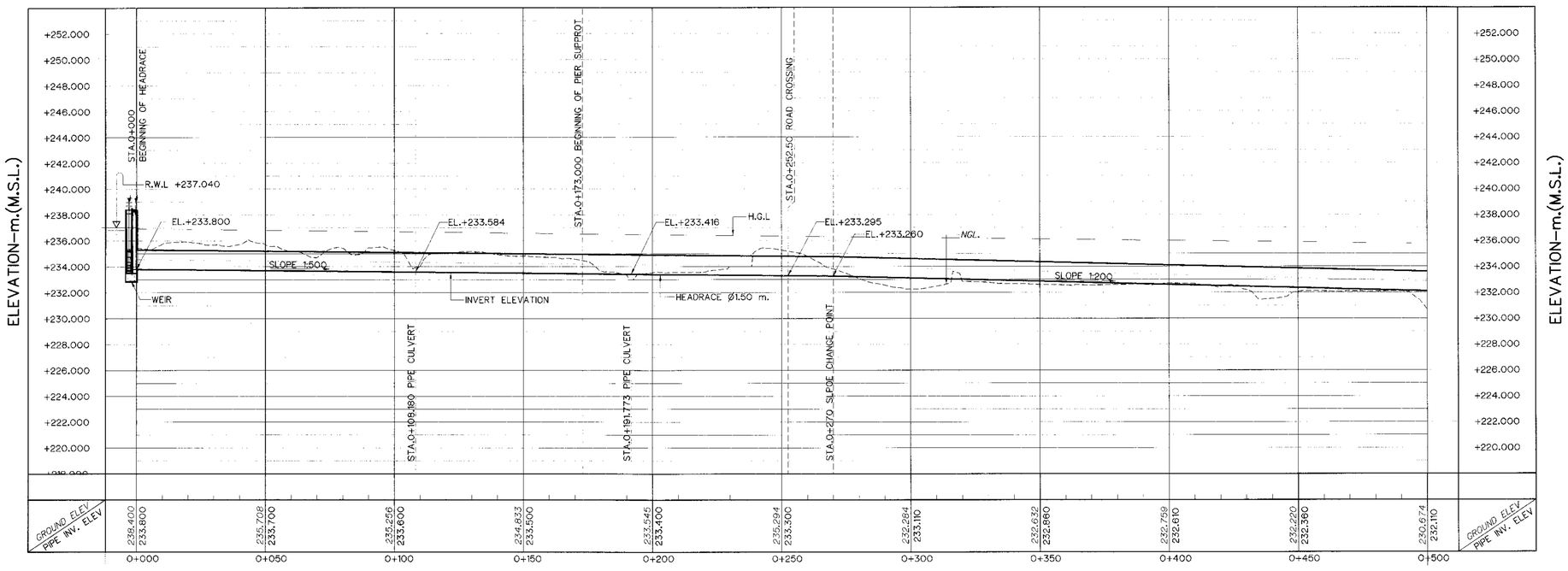

PROFILE

VERTICAL SCALE 1:200

HORIZONTAL SCALE 1:1,000

0 5 10 15 SCALE 1:200 METERS

0 10 20 40 60 80 SCALE 1:1,000 METERS

NOTES :

1. ALL DIMENSIONS AND ELEVATIONS (M.S.L.) ARE IN METERS. UNLESS OTHERWISE SHOWN.
2. SYMBOLS, ABBREVIATIONS AND GENERAL NOTES SEE DWG. NO. KLP–GN–03
3. THE ALIGNMENT OF THE HEADRACE AND RELATED STRUCTURES SHALL BE CHECK AND CORRECTED BY THE CONTRACTOR TO SUIT THE FIELD CONDITIONS AND SHALL BE SUBMITTED TO DEDE'S FIELD ENGINEER FOR APPROVAL

REFERENCE DRAWINGS :

1. HEADRACE, PLAN AND PROFILE, STA. 0+500 TO STA. 1+000 KLP–HR–04
2. HEADRACE, TYPICAL SECTIONS AND DETAILS KLP–HR–06
3. HEADRACE, STEEL PIPE AND JOINT DETAILS KLP–HR–07

NO.	DATE	REVISIONS	CHECKED	APPROVED
3				
2				
1				

CONSULTANTS — DEDE

KINGDOM OF THAILAND
Department of Alternative Energy Development and Efficiency
MINISTRY OF ENERGY

KLONG LAM PLOK HYDROPOWER PROJECT

CIVIL WORKS AND TRANSMISSION LINE
HEADRACE
PLAN AND PROFILE, STA. 0+000 TO STA. 0+500

P&C MANAGEMENT CO.,LTD.

Department of Alternative Energy Development and Efficiency MINISTRY OF ENERGY

DESIGNED	28.29074 28.6226	REVIEWED	
DRAWN		SUBMITTED	
CHECKED	28.6226	RECOMMENDED	
PROJECT MANAGER	08/03/2559 DATE	APPROVED	

DRAWING NO. KLP–HR–03

SHEET NO. 26 OF 110

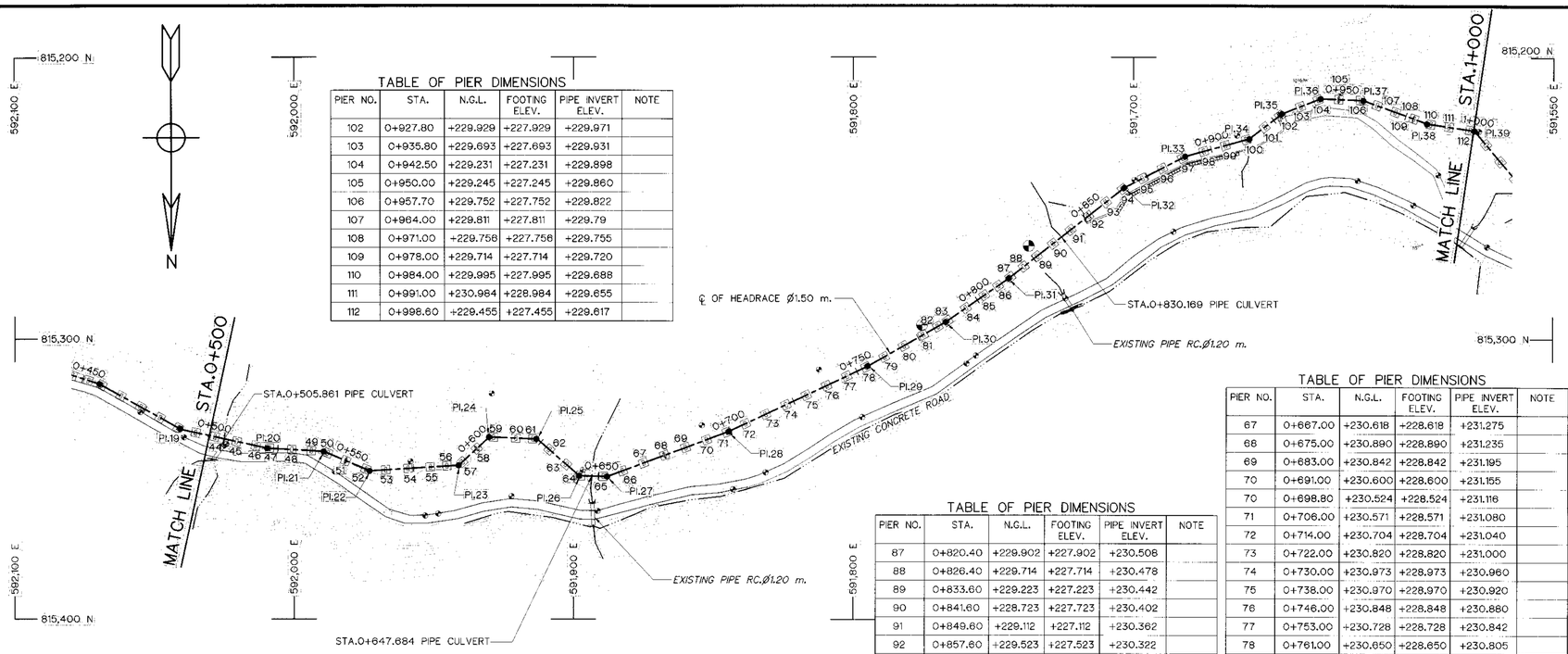

PLAN

SCALE 1:1,000

TABLE OF PIER DIMENSIONS

PIER NO.	STA.	N.G.L.	FOOTING ELEV.	PIPE INVERT ELEV.	NOTE
102	0+927.80	+229.929	+227.929	+229.971	
103	0+935.80	+229.693	+227.693	+229.931	
104	0+942.50	+229.231	+227.231	+229.898	
105	0+950.00	+229.245	+227.245	+229.860	
106	0+957.70	+229.752	+227.752	+229.822	
107	0+964.00	+229.811	+227.811	+229.79	
108	0+971.00	+229.758	+227.758	+229.755	
109	0+978.00	+229.714	+227.714	+229.720	
110	0+984.00	+229.995	+227.995	+229.688	
111	0+991.00	+230.984	+228.984	+229.655	
112	0+998.60	+229.455	+227.455	+229.617	

TABLE OF PIER DIMENSIONS

PIER NO.	STA.	N.G.L.	FOOTING ELEV.	PIPE INVERT ELEV.	NOTE
87	0+820.40	+229.902	+227.902	+230.508	
88	0+826.40	+229.714	+227.714	+230.478	
89	0+833.60	+229.223	+227.223	+230.442	
90	0+841.60	+228.723	+227.723	+230.402	
91	0+849.60	+229.112	+227.112	+230.362	
92	0+857.60	+229.523	+227.523	+230.322	
93	0+865.20	+229.534	+227.534	+230.284	
94	0+873.20	+229.743	+227.743	+230.244	
95	0+881.20	+229.776	+227.776	+230.204	
97	0+889.20	+229.779	+227.779	+230.164	
98	0+897.20	+229.742	+227.742	+230.124	
99	0+905.20	+229.680	+227.680	+230.084	
100	0+912.90	+229.676	+227.676	+230.046	
101	0+920.90	+229.728	+227.728	+230.006	

TABLE OF PIER DIMENSIONS

PIER NO.	STA.	N.G.L.	FOOTING ELEV.	PIPE INVERT ELEV.	NOTE
67	0+667.00	+230.618	+228.618	+231.275	
68	0+675.00	+230.890	+228.890	+231.235	
69	0+683.00	+230.842	+228.842	+231.195	
70	0+691.00	+230.600	+228.600	+231.155	
70	0+698.80	+230.524	+228.524	+231.116	
71	0+706.00	+230.571	+228.571	+231.080	
72	0+714.00	+230.704	+228.704	+231.040	
73	0+722.00	+230.820	+228.820	+231.000	
74	0+730.00	+230.973	+228.973	+230.960	
75	0+738.00	+230.970	+228.970	+230.920	
76	0+746.00	+230.848	+228.848	+230.880	
77	0+753.00	+230.728	+228.728	+230.842	
78	0+761.00	+230.650	+228.650	+230.805	
79	0+769.00	+230.556	+228.556	+230.765	
80	0+777.00	+230.632	+228.632	+230.725	
81	0+783.00	+230.706	+228.706	+230.695	
82	0+787.10	+230.638	+228.638	+230.675	
83	0+795.00	+230.370	+228.370	+230.635	
84	0+803.00	+229.980	+227.980	+230.595	
85	0+809.00	+229.971	+227.971	+230.565	
86	0+814.40	+229.967	+227.967	+230.538	

HORIZONTAL CURVE OF HEADRACE

NO. PI.	COORDINATE OF PI. N	COORDINATE OF PI. E	PI. TO PI. (m)	DEFLECTION ANGLE (Δ) (° – ' – ")	PI. STA. (km)	BEARING (N/S ° – ' – " E/W)
PI.20	815,338.979	592,009.633	31.545	08°– 53'– 13.29"	0+521.220	N 77°–50'–02.68"W
PI.21	815,340.135	591,989.455	20.211	19°– 24'–02.34"	0+541.431	N 86°–43'– 15.97" W
PI.22	815,347.054	591,972.898	17.945	26°– 15'– 54.64"	0+559.376	N 67°– 19'– 13.63" W
PI.23	815,345.058	591,941.045	31.915	39°– 04'–59.92"	0+591.291	S 86°–24'– 51.74" W
PI.24	815,335.019	591,930.154	14.812	45°– 05'– 37.90"	0+606.103	S 47°– 19'– 51.81" W
PI.25	815,335.744	591,913.034	17.135	38°– 25'– 37.37"	0+623.238	N 87°–34'–30.29"W
PI.26	815,348.782	591,897.957	19.933	39°– 27'– 30.77"	0+643.171	N 49°–08'– 52.91" W
PI.27	815,349.026	591,887.926	10.034	21°– 36'– 25.83"	0+653.205	N 88°–36'–23.68"W
PI.28	815,333.003	591,844.409	46.373	04°– 50'– 25.86"	0+699.578	S 69°–47'– 10.49" W
PI.29	815,309.831	591,794.839	54.719	04°– 25'– 49.44"	0+754.297	S 64°–56'–44.82"W
PI.30	815,294.053	591,766.934	32.057	05°– 07'– 19.80"	0+786.354	S 60°–30'–55.38"W
PI.31	815,278.566	591,744.490	27.269	03°– 20'– 11.23"	0+813.623	S 55°–23'–35.58"W
PI.32	815,246.378	591,703.207	52.348	10°– 47'– 46.25"	0+865.971	S 52°–03'–24.35"W
PI.33	815,235.249	591,681.503	24.391	11°– 45'–40.86"	0+890.362	S 62°– 51'– 10.60" W
PI.34	815,228.970	591,658.685	23.666	21°– 49'–30.63"	0+914.028	S 74°–36'–51.46" W
PI.35	815,219.987	591,646.855	14.854	15°– 59'– 40.34"	0+928.882	S 52°–47'–20.83"W
PI.36	815,214.676	591,633.174	14.676	23°– 21'– 45.41"	0+943.558	S 68°–47'– 01.17" W
PI.37	815,215.247	591,617.938	15.247	17°– 37'– 16.47"	0+958.805	N 87°– 51'– 13.42" W
PI.38	815,223.502	591,594.968	24.408	11°– 26'– 35.69"	0+983.213	N 70°– 13'– 56.95" W
PI.39	815,225.961	591,578.162	16.985	41°– 29'– 11.54"	1+000.198	N 81°– 40'–32.64" W

TABLE OF PIER DIMENSIONS

PIER NO.	STA.	N.G.L.	FOOTING ELEV.	PIPE INVERT ELEV.	NOTE
44	0+502.00	+230.653	+228.653	+232.100	
45	0+510.50	+230.846	+228.846	+232.060	
46	0+517.50	+230.806	+228.806	+232.025	
47	0+522.00	+231.034	+229.034	+232.000	
48	0+530.00	+231.337	+229.337	+231.960	
49	0+537.00	+231.261	+229.261	+231.925	
50	0+543.50	+230.737	+228.737	+231.895	
51	0+550.00	+230.305	+228.305	+231.860	
52	0+557.80	+229.952	+227.952	+231.821	
53	0+565.00	+229.678	+227.678	+231.785	
54	0+573.00	+229.678	+227.678	+231.745	
55	0+581.00	+229.445	+227.445	+231.705	
56	0+587.00	+229.642	+227.642	+231.675	
57	0+592.00	+230.000	+228.000	+231.646	
58	0+600.00	+230.996	+228.996	+231.610	
59	0+607.600	+230.587	+228.587	+231.572	
60	0+615.600	+230.000	+228.000	+231.532	
61	0+621.700	+230.000	+228.000	+231.502	
62	0+629.000	+230.370	+228.370	+231.465	
63	0+637.000	+229.785	+227.785	+231.425	
64	0+643.700	+230.679	+228.679	+231.392	
65	0+651.000	+230.954	+228.954	+231.352	
66	0+659.00	+230.618	+228.618	+231.315	

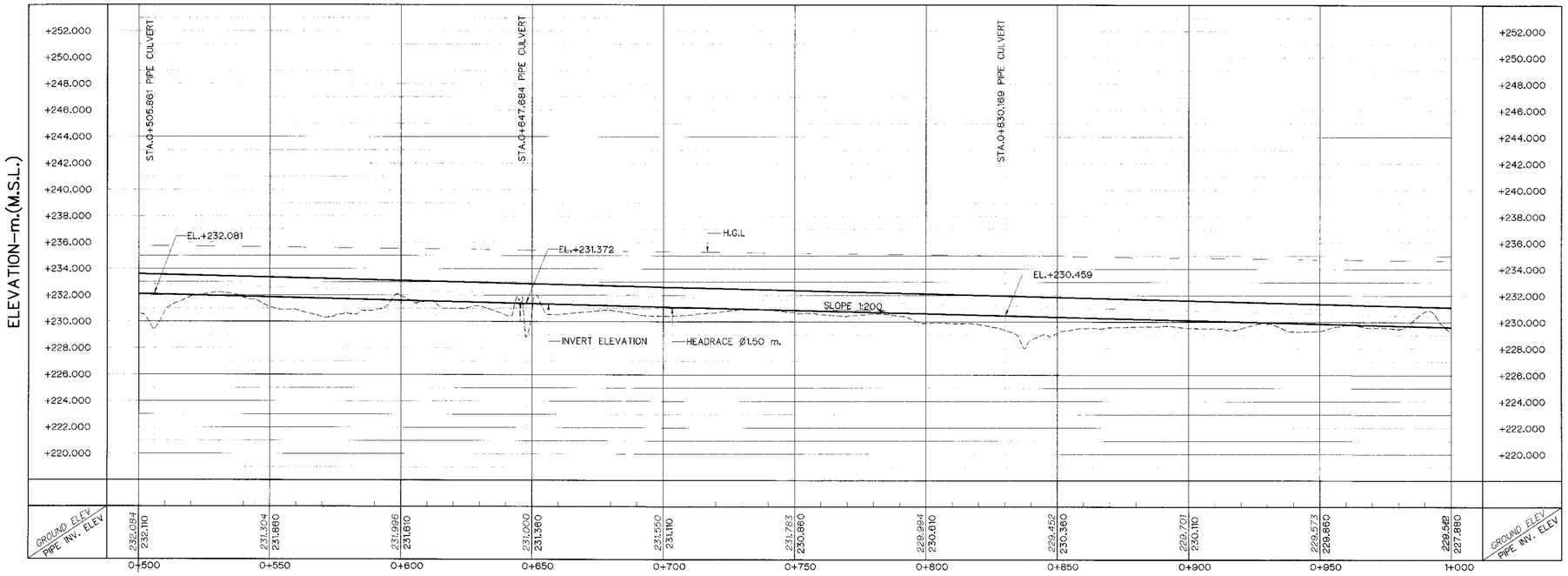

PROFILE

VERTICAL SCALE 1:200

HORIZONTAL SCALE 1:1,000

0 5 10 15 SCALE 1:200 METERS

0 10 20 40 60 80 SCALE 1:1,000 METERS

NOTES :

1. ALL DIMENSIONS AND ELEVATIONS (M.S.L.) ARE IN METERS. UNLESS OTHERWISE SHOWN.
2. SYMBOLS, ABBREVIATIONS AND GENERAL NOTES SEE DWG. NO. KLP–GN–03
3. THE ALIGNMENT OF THE HEADRACE AND RELATED STRUCTURES SHALL BE CHECK AND CORRECTED BY THE CONTRACTOR TO SUIT THE FIELD CONDITIONS AND SHALL BE SUBMITTED TO DEDE'S FIELD ENGINEER FOR APPROVAL

REFERENCE DRAWINGS :

1. HEADRACE, PLAN AND PROFILE, STA. 0+000 TO STA. 0+500 — KLP–HR–03
2. HEADRACE, PLAN AND PROFILE, STA. 1+000 TO STA. 1+459.506 — KLP–HR–05
3. HEADRACE, TYPICAL SECTIONS AND DETAILS — KLP–HR–06
4. HEADRACE, STEEL PIPE AND JOINT DETAILS — KLP–HR–07

NO.	DATE	REVISIONS	CHECKED	APPROVED
3				
2				
1				

CONSULTANTS — DEDE

KINGDOM OF THAILAND
Department of Alternative Energy Development and Efficiency
MINISTRY OF ENERGY

KLONG LAM PLOK HYDROPOWER PROJECT

CIVIL WORKS AND TRANSMISSION LINE

HEADRACE

PLAN AND PROFILE, STA. 0+500 TO STA. 1+000

P&C MANAGEMENT CO.,LTD.

DESIGNED สิน.29074 สิน.6226
DRAWN
CHECKED สิน.6226
PROJECT MANAGER 08/03/2559 DATE

Department of Alternative Energy Development and Efficiency
MINISTRY OF ENERGY
REVIEWED
SUBMITTED
RECOMMENDED
APPROVED P. Hanuth.

DRAWING NO. KLP–HR–04

SHEET NO. 27 OF 110

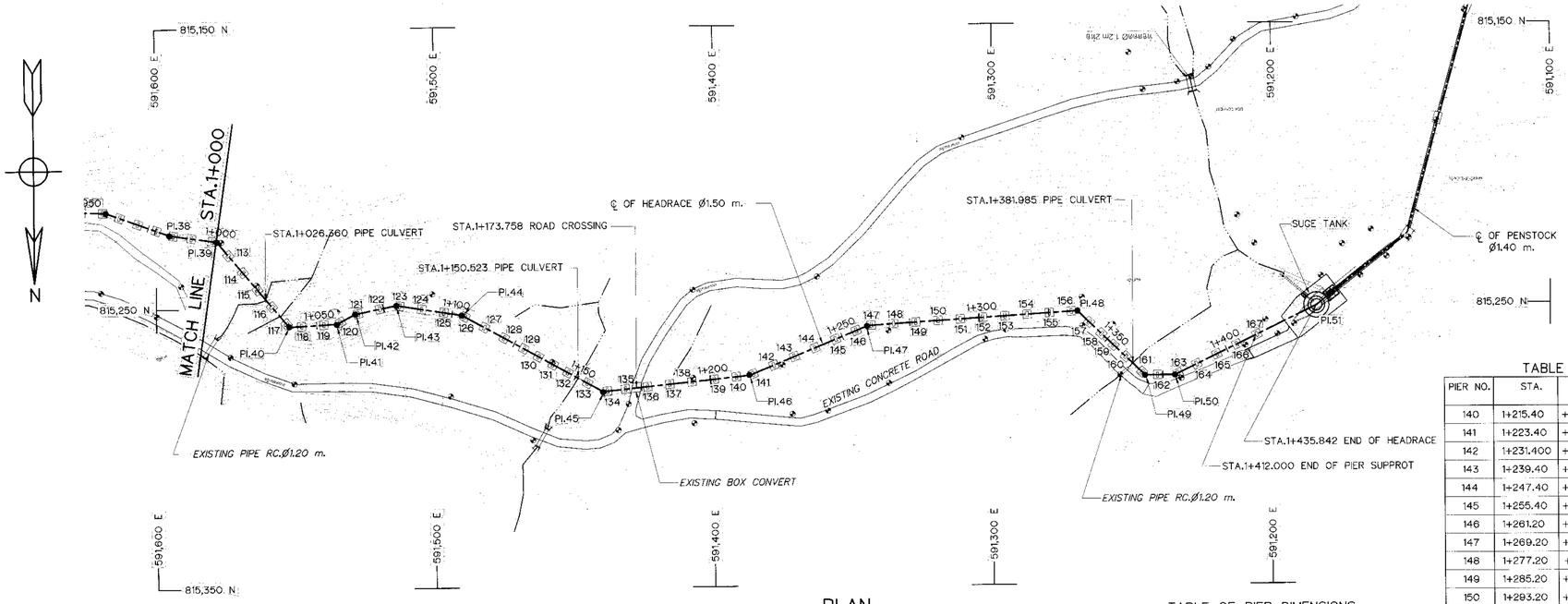

PLAN

SCALE 1:1,000

HORIZONTAL CURVE OF HEADRACE

NO. PI.	COORDINATE OF PI. N	COORDINATE OF PI. E	PI. TO PI. (m)	DEFLECTION ANGLE (△) (° – ' – ")	PI. STA. (km)	BEARING (N/S ° – ' – " E/W)
PI.39	815,225.961	591,578.162	16.985	41°– 29'– 11.54"	1+000.198	N 81°– 40'–32.64"W
PI.40	815,256.478	591,552.383	39.948	53°–06'–09.84"	1+040.146	N 40°– 11'– 21.10" W
PI.41	815,255.493	591,535.258	17.153	24°– 13'– 04.07"	1+057.299	S 86°– 42'–29.07"W
PI.42	815,252.06	591,528.666	7.432	15°– 59'– 52.41"	1+064.731	S 62°– 29'–25.00"W
PI.43	815,249.05	591,513.887	15.082	20°–20'–28.60"	1+079.813	S 78°– 29'–17.40"W
PI.44	815,252.703	591,490.37	23.799	19°– 46'– 55.37"	1+103.612	N 81°– 10'– 14.00"W
PI.45	815,280.266	591,439.84	57.559	34°– 39'– 57.81"	1+161.171	N 61°– 23'– 18.63" W
PI.46	815,274.67	591,387.081	53.055	16°– 20'– 35.47"	1+214.226	S 83°– 56'–43.56"W
PI.47	815,257.212	591,344.72	45.817	18°– 46'– 28.36"	1+260.043	S 67°– 36'–08.09"W
PI.48	815,252.461	591,269.69	75.180	47°–07'–06.65"	1+335.223	S 86°– 22'–36.45"W
PI.49	815,275.481	591,245.428	33.445	44°– 01'– 05.86"	1+368.668	N 46°– 30'–16.90" W
PI.50	815,275.383	591,234.692	10.736	25°– 21'– 26.64"	1+379.404	S 89°– 28'–37.23"W
PI.51	815,250.748	591,183.914	56.438			

TABLE OF PIER DIMENSIONS

PIER NO.	STA.	N.G.L.	FOOTING ELEV.	PIPE INVERT ELEV.	NOTE
160	1+367.10	+225.000	+223.000	+227.775	
161	1+373.10	+225.922	+223.922	+227.745	
162	1+380.60	+226.831	+224.831	+227.707	
163	1+388.00	+226.655	+224.655	+227.670	
164	1+396.00	+226.846	+224.846	+227.630	
165	1+404.00	+227.112	+225.112	+227.590	
167	1+412.00	+227.550	+225.550	+227.550	

TABLE OF PIER DIMENSIONS

PIER NO.	STA.	N.G.L.	FOOTING ELEV.	PIPE INVERT ELEV.	NOTE
140	1+215.40	+227.398	+225.398	+228.533	
141	1+223.40	+226.845	+224.845	+228.493	
142	1+231.400	+225.721	+223.721	+228.453	
143	1+239.40	+225.487	+223.487	+228.413	
144	1+247.40	+227.733	+225.733	+228.373	
145	1+255.40	+228.689	+226.689	+228.333	
146	1+261.20	+228.701	+226.701	+228.304	
147	1+269.20	+229.312	+227.312	+228.264	
148	1+277.20	+228.887	+226.887	+228.224	
149	1+285.20	+227.901	+225.901	+228.184	
150	1+293.20	+226.988	+224.988	+228.144	
151	1+301.20	+226.811	+224.811	+228.104	
152	1+309.20	+226.975	+224.975	+228.064	
153	1+317.20	+227.257	+225.257	+228.024	
154	1+325.20	+227.901	+225.901	+227.984	
155	1+333.10	+227.325	+225.325	+227.945	
156	1+341.10	+227.000	+225.000	+227.905	
157	1+347.10	+226.235	+224.235	+228.064	
158	1+353.10	+225.301	+224.301	+228.024	
159	1+359.10	+223.369	+221.369	+228.024	

TABLE OF PIER DIMENSIONS

PIER NO.	STA.	N.G.L.	FOOTING ELEV.	PIPE INVERT ELEV.	NOTE
113	1+006.60	+229.000	+227.000	+229.577	
114	1+014.60	+229.432	+227.432	+229.537	
115	1+022.60	+228.711	+226.711	+229.497	
116	1+030.60	+228.402	+226.402	+229.457	
117	1+038.60	+228.722	+226.722	+229.417	
118	1+044.60	+228.215	+226.215	+229.387	
119	1+052.60	+228.312	+226.312	+229.347	
120	1+058.80	+228.634	+226.634	+229.316	
121	1+065.80	+228.504	+226.504	+229.281	
122	1+073.80	+228.753	+226.753	+229.241	
123	1+081.80	+228.695	+226.695	+229.205	
124	1+089.00	+228.825	+226.825	+229.165	
125	1+104.80	+228.802	+226.802	+229.086	
126	1+112.80	+228.695	+226.695	+229.046	
127	1+120.80	+228.478	+226.478	+229.006	
128	1+128.80	+228.678	+226.678	+228.966	
129	1+134.80	+228.673	+226.673	+228.936	
130	1+140.80	+227.367	+225.367	+228.906	
131	1+146.80	+226.675	+224.675	+228.876	
132	1+154.80	+226.698	+224.698	+228.836	
133	1+162.70	+227.745	+225.745	+228.797	
134	1+169.20	+228.326	+226.326	+228.764	
135	1+177.20	+229.678	+227.678	+228.724	
136	1+185.20	+228.779	+226.779	+228.684	
137	1+193.20	+227.765	+225.765	+228.644	
138	1+201.20	+227.324	+225.324	+228.604	
139	1+209.20	+227.325	+225.325	+228.564	

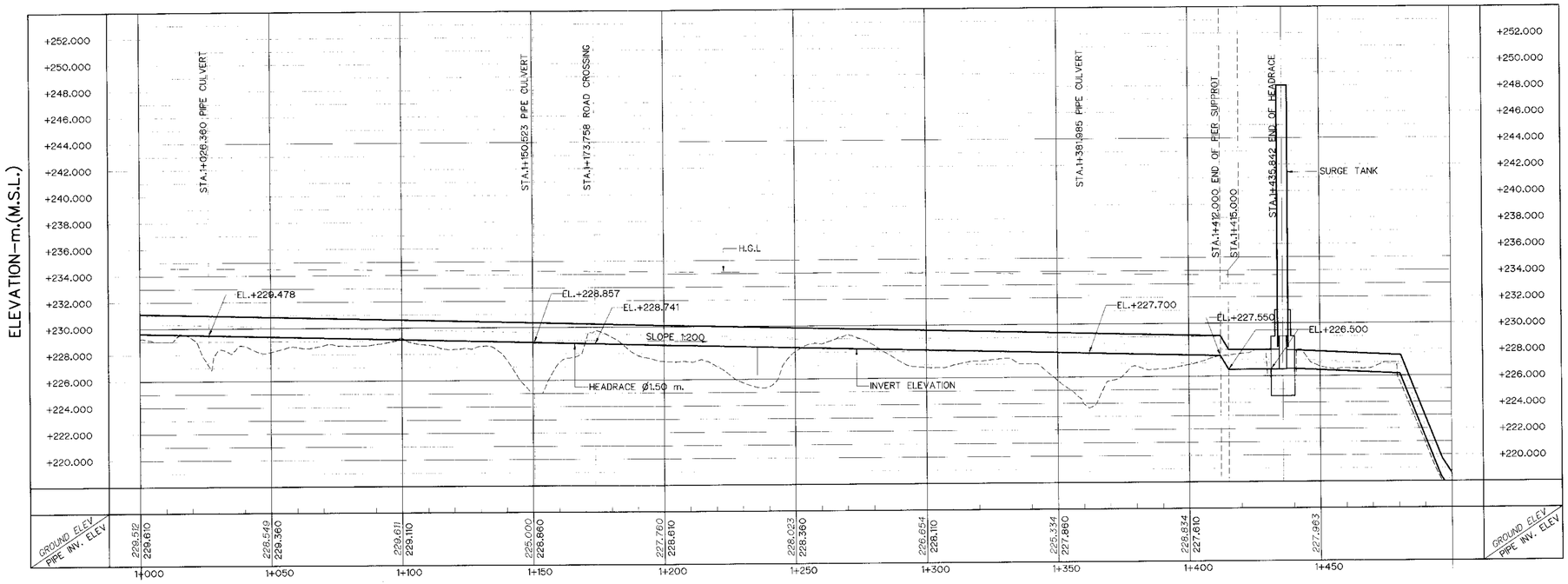

PROFILE

VERTICAL SCALE 1:200

HORIZONTAL SCALE 1:1,000

0 5 10 15
SCALE 1:200 METERS

0 10 20 40 60 80
SCALE 1:1,000 METERS

NOTES :

1. ALL DIMENSIONS AND ELEVATIONS (M.S.L.) ARE IN METERS. UNLESS OTHERWISE SHOWN.
2. SYMBOLS, ABBREVIATIONS AND GENERAL NOTES SEE DWG. NO. KLP–GN–03
3. THE ALIGNMENT OF THE HEADRACE AND RELATED STRUCTURES SHALL BE CHECK AND CORRECTED BY THE CONTRACTOR TO SUIT THE FIELD CONDITIONS AND SHALL BE SUBMITTED TO DEDE'S FIELD ENGINEER FOR APPROVAL

REFERENCE DRAWINGS :

1. HEADRACE, PLAN AND PROFILE, STA. 1+000 TO STA. 1+500 — KLP–HR–04
2. HEADRACE, TYPICAL SECTIONS AND DETAILS — KLP–HR–06
3. HEADRACE, STEEL PIPE AND JOINT DETAILS — KLP–HR–07

NO.	DATE	REVISIONS	CHECKED	APPROVED
3				
2				
1				

CONSULTANTS — DEDE

KINGDOM OF THAILAND
Department of Alternative Energy Development and Efficiency
MINISTRY OF ENERGY

KLONG LAM PLOK HYDROPOWER PROJECT

CIVIL WORKS AND TRANSMISSION LINE

HEADRACE

PLAN AND PROFILE, STA. 1+000 TO STA. 1+459.506

P&C MANAGEMENT CO.,LTD.

Department of Alternative Energy Development and Efficiency
MINISTRY OF ENERGY

DESIGNED — REVIEWED
DRAWN — SUBMITTED
CHECKED — RECOMMENDED
PROJECT MANAGER — APPROVED
DATE 08/03/2559

DRAWING NO. KLP–HR–05

SHEET NO. 28 OF 110

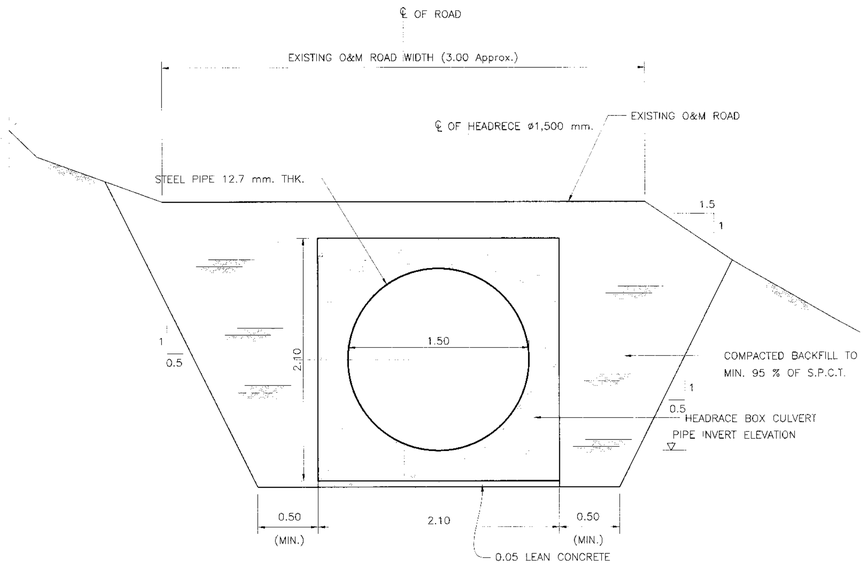

EARTH EXCAVATION

NOT TO SCALE

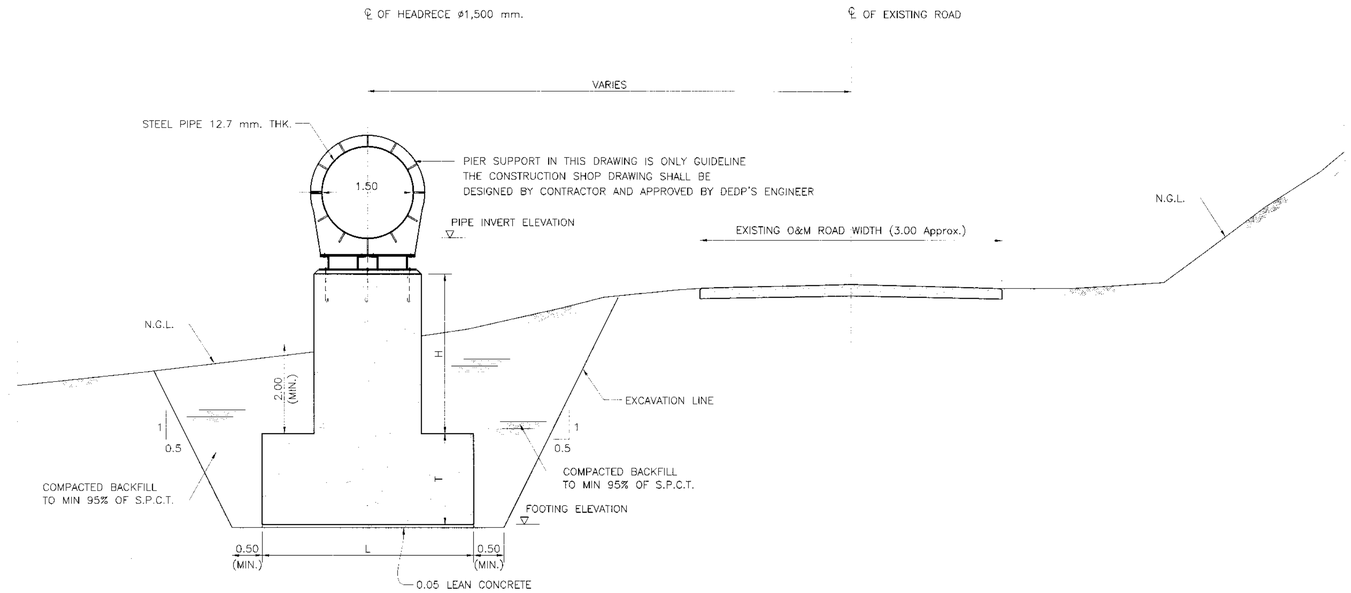

CONCRETE PIER

SCALE 1:50

TYPICAL SECTIONS OF HEADRACE

SCALE 1:50

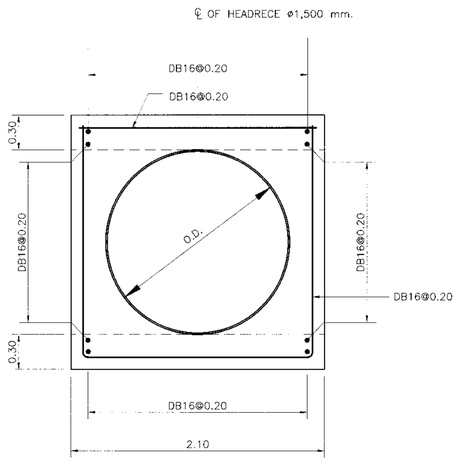

HEADRACE BOX CONCRETE REINFORCEMENT DETAIL

NOT TO SCALE

TABLE OF HEADRACE SUPPORT

STA TO STA	TYPE OF HEADRACE SUPPORT
0+000 – 0+173	EARTH EXCAVATION
0+173 – 1+412	PIER
1+412 – 1+435.842	EARTH EXCAVATION

NOTES :

1. ALL DIMENSIONS AND ELEVATIONS (M.S.L.) ARE IN METERS, UNLESS OTHERWISE SHOWN.
2. SYMBOLS, ABBREVIATIONS AND GENERAL NOTES SEE DWG. NO. KLP–GN–03
3. CONCRETE DESIGN BASED ON THE COMPRESSIVE STRENGTH OF 210 KSC, STANDARD CYLINDER Ø0.15x0.30 m. TEST AT AGE 28 DAYS. UNLESS OTHERWISE INDICATED IN SPECIFIC DRAWINGS.
4. ULTIMATE TENSILE STRESSES OF REINFORCING STEEL, CONFORM TO THE REQUIREMENT OF THAI INDUSTRIAL STANDARD DESIGNATION SR24 FOR STRUCTURAL GRADE PLAIN ROUND BAR AND SD30 FOR INTERMEDIATE GRADE DEFORMED BAR.

REFERENCE DRAWINGS :

1. HEADRACE, CONCRETE PIER SECTION AND DETAIL KLP–HR–08

0 0.5 1 2 3 4

SCALE 1:50 METERS

KINGDOM OF THAILAND
Department of Alternative Energy Development and Efficiency
MINISTRY OF ENERGY

KLONG LAM PLOK HYDROPOWER PROJECT

CIVIL WORKS AND TRANSMISSION LINE
HEADRACE
TYPICAL SECTIONS AND DETAILS

NO.	DATE	REVISIONS	CHECKED	APPROVED
3				
2				
1				

CONSULTANTS DEDE

P&C MANAGEMENT CO.,LTD.

DESIGNED 28.29074 28.6226
DRAWN
CHECKED 28.6226
PROJECT MANAGER 08/03/2559 DATE

Department of Alternative Energy Development and Efficiency MINISTRY OF ENERGY
REVIEWED
SUBMITTED
RECOMMENDED
APPROVED

DRAWING NO. KLP–HR–06
SHEET NO. 29 OF 110

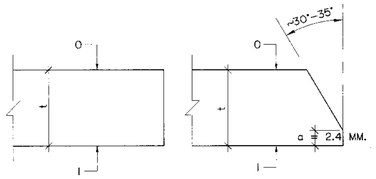

PIPE END DIMENSIONS

NOT TO SCALE

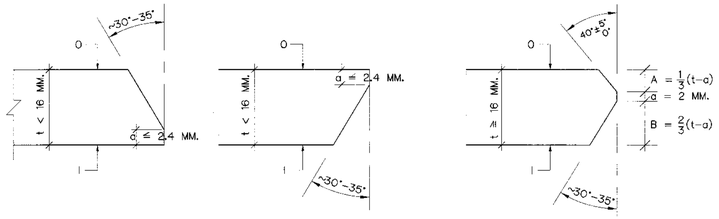

PIPE END DIMENSIONS

FOR D ≥ 800 MM.

NOT TO SCALE

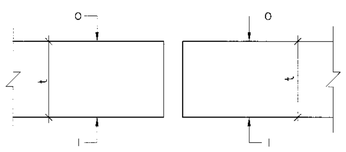

COUPLING

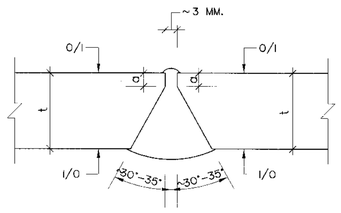

BUTT WELDED

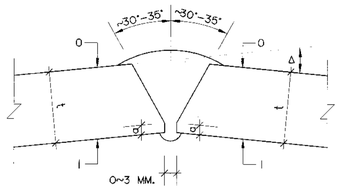

OUTSIDE WELD FOR BEND

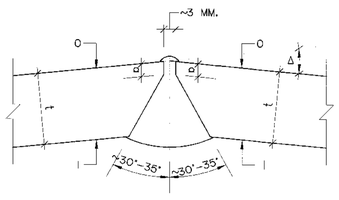

INSIDE WELD FOR BEND

DIMENSIONS FOR PIPE CONNECTING

NOT TO SCALE

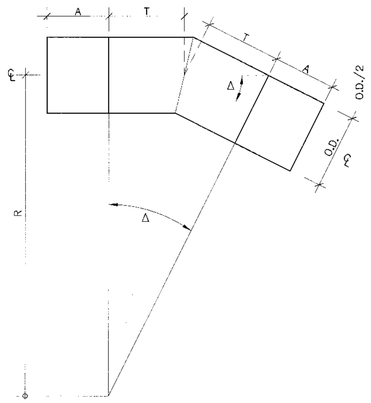

PIPE BEND DETAILED

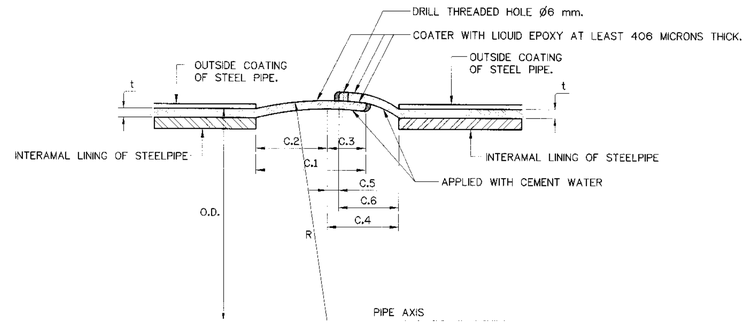

SURFACES SLEEVE WELDED JOINT

NOT TO SCALE

DIMENSIONS IN MILLIMETERS

NOMINAL DIAMETER	OUTSIDE DIA. OD.	THICKNESS t	R	C.1 (C.2 + C.3)	C.2	C.3	C.4 (C.5 + C.6)	C.5	C.6
1,500	1524.0	12.7	796	395	237	158	281	31	250

NOTE :

1. TOLERANE OUTSIDE CIRCUMFERENCE OF SPIGOT SHALL BE $^{+0}_{-8}$ mm.
2. TOLERANE OUTSIDE CIRCUMFERENCE OF SOCKET SHALL BE $^{+0}_{-8}$ mm.
3. IN CASE OF THE PIPE TO BE COATED INSIDE WITH LIQUID EPOXY THE COATING SHALL EXTEND TO PIPE ENDS.
4. ALL DIMENSIONS IN MILLIMETER, UNLESS OTHERWISE SHOWN.
5. SYMBOLS

t	=	PIPE THICKESS
O.D.	=	OUTSIDE DIAMETER
O	=	OUTSIDE FACE
I	=	INSIDE FACE

6. Δ SHALL BE LESS THAN 22.5 DEGREE

NO.	DATE	REVISIONS	CHECKED	APPROVED
3				
2				
1				

CONSULTANTS | DEDE

KINGDOM OF THAILAND
Department of Alternative Energy Development and Efficiency
MINISTRY OF ENERGY

KLONG LAM PLOK HYDROPOWER PROJECT

CIVIL WORKS AND TRANSMISSION LINE
HEADRACE
STEEL PIPE AND JOINT DETAILS

P&C MANAGEMENT CO.,LTD.

DESIGNED — 28.29074 — 28.6226
DRAWN
CHECKED — 28.6226
PROJECT MANAGER — DATE 08/03/2559

Department of Alternative Energy Development and Efficiency
MINISTRY OF ENERGY

REVIEWED
SUBMITTED
RECOMMENDED
APPROVED

DRAWING NO. KLP-HR-07

SHEET NO. 30 OF 110

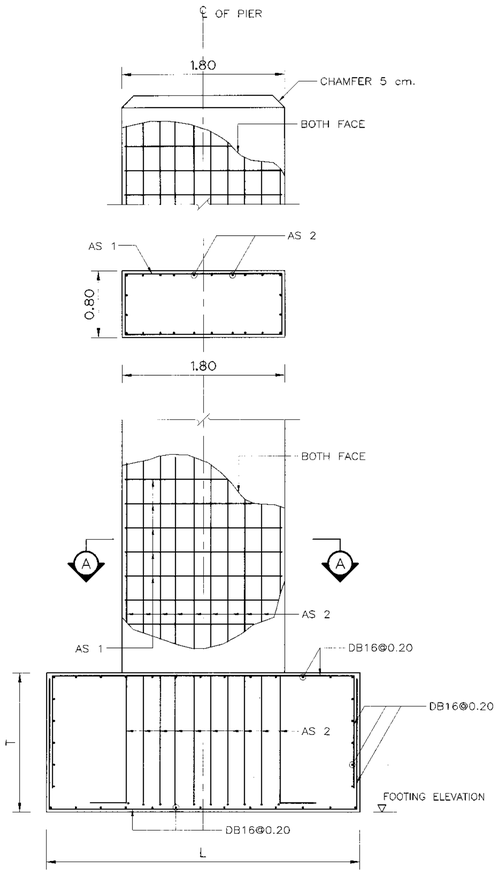

RC. PIER DETAILS

SCALE 1:30

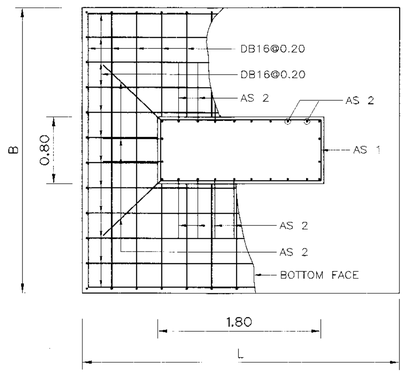

SECTION A–A

SCALE 1:30

PIER DATA

H	BXL	T	AS 1	AS 2
H < 1	1.80x1.80	0.60	DB16@0.20	DB16@0.20
1 < H ≤ 2	2.00x2.00	0.60	DB16@0.20	DB16@0.20
2 < H ≤ 3	2.40x2.20	0.80	DB16@0.20	DB16@0.15
3 < H ≤ 4	2.60x2.60	0.80	DB16@0.20	DB16@0.15
4 < H ≤ 5	3.00x2.80	1.00	DB16@0.20	DB20@0.20
5 < H ≤ 6	3.00x3.00	1.00	DB16@0.20	DB20@0.15

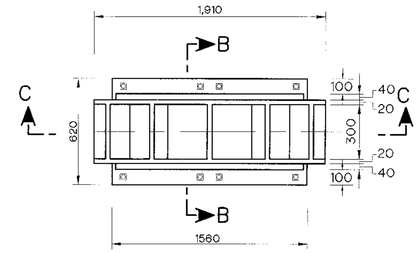

PLAN

NOT TO SCALE

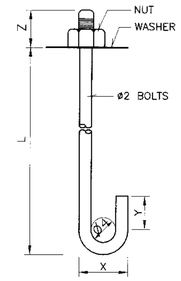

HOOKED BOLT

NOT TO SCALE

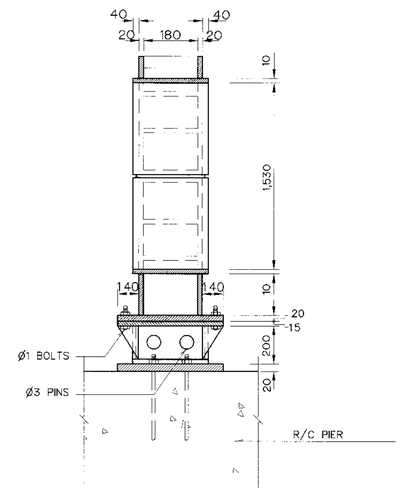

SECTION B–B

NOT TO SCALE

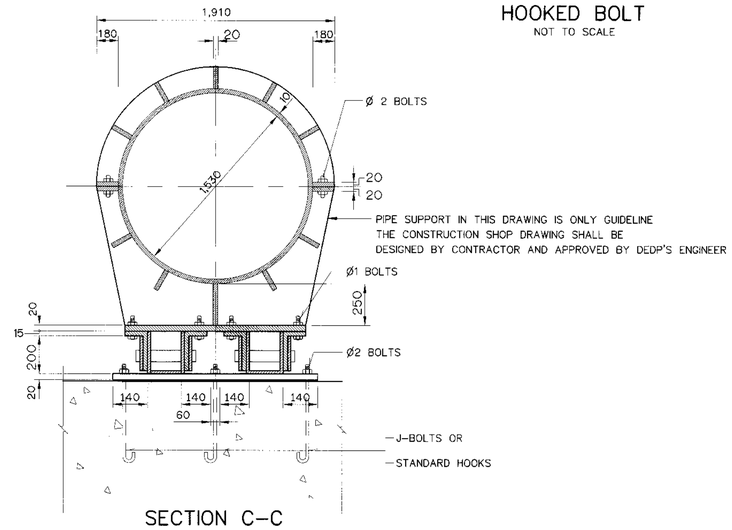

SECTION C–C

NOT TO SCALE

NOTES :

1. DIMENSIONS AND ELEVATIONS (M.S.L.) ARE IN METERS, DIMENSIONS OF PIPE SUPPORT ARE IN MILLIMETERS UNLESS OTHERWISE SHOWN.
2. SYMBOLS, ABBREVIATIONS AND GENERAL NOTES SEE DWG. NO. KLP–GN–03
3. CONCRETE DESIGN BASED ON THE COMPRESSIVE STRENGTH OF 210 KSC, STANDARD CYLINDER Ø0.15x0.30 m. TEST AT AGE 28 DAYS. UNLESS OTHERWISE INDICATED IN SPECIFIC DRAWINGS.
4. ULTIMATE TENSILE STRESSES OF REINFORCING STEEL, CONFORM TO THE REQUIREMENT OF THAI INDUSTRIAL STANDARD DESIGNATION SR24 FOR STRUCTURAL GRADE PLAIN ROUND BAR AND SD30 FOR INTERMEDIATE GRADE DEFORMED BAR.
5. ALLOWABLE BEARING CAPACITY NOT LESS THAN 15 TON/sq m.

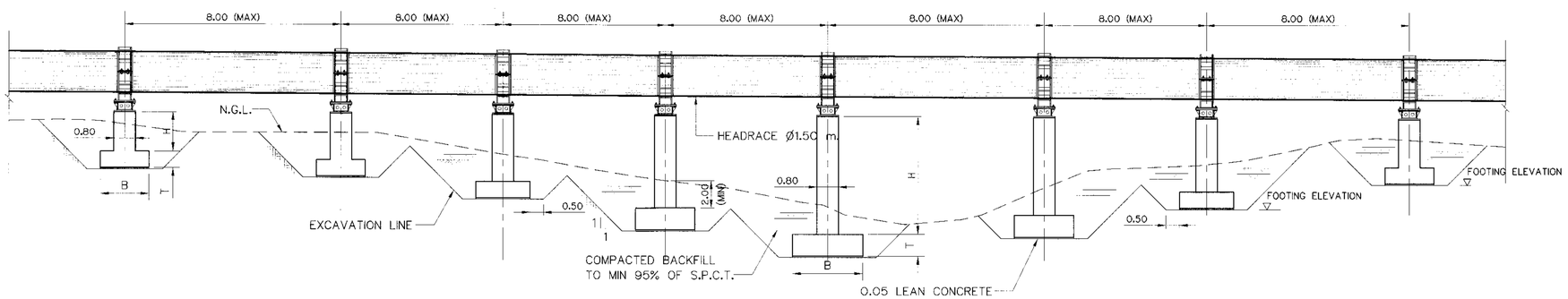

PROFILE OF CONCRETE PIER

SCALE 1:100

KINGDOM OF THAILAND
Department of Alternative Energy Development and Efficiency
MINISTRY OF ENERGY

KLONG LAM PLOK HYDROPOWER PROJECT

CIVIL WORKS AND TRANSMISSION LINE
HEADRACE
CONCRETE PIER SECTION AND DETAILS

NO.	DATE	REVISIONS	CHECKED	APPROVED
3				
2				
1				

CONSULTANTS — DEDE

P&C MANAGEMENT CO.,LTD.

DESIGNED — 08.29074 — 28.6226
DRAWN
CHECKED — 28.6226
PROJECT MANAGER — 08/03/2559 — DATE

Department of Alternative Energy Development and Efficiency
MINISTRY OF ENERGY
REVIEWED
SUBMITTED
RECOMMENDED
APPROVED

DRAWING NO. KLP–HR–08
SHEET NO. 31 OF 110

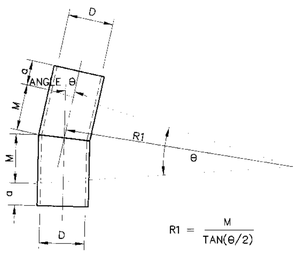

2-PIECE ELBOW
NOT TO SCALE

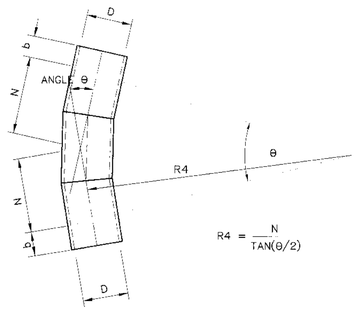

3-PIECE ELBOW
NOT TO SCALE

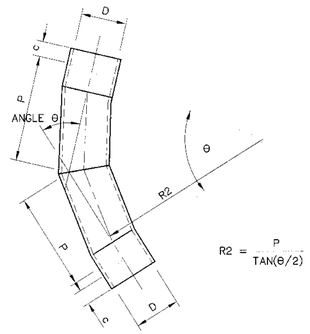

4-PIECE ELBOW
NOT TO SCALE

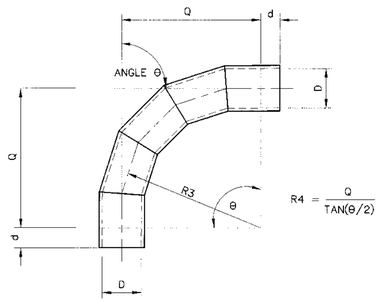

5-PIECE ELBOW
NOT TO SCALE

D	ELBOW							
	2-PIECE θ = 11.25°		3-PIECE θ = 22.25°		4-PIECE θ = 45°		5-PIECE θ = 45°	
	M	a	N	b	P	c	Q	d
150	100	250	175	225	275	225	375	250
200	100	250	200	225	300	225	450	250
250	100	250	225	200	350	225	500	250
300	125	275	250	275	400	275	575	300
400	150	350	300	325	500	325	700	350
500	175	350	350	325	550	325	825	350
600	200	350	400	350	650	350	650	350
700	225	400	450	400	725	400	950	375
800	225	475	500	450	800	450	1075	425
900	250	450	525	450	850	425	1175	475
1,000	250	525	550	500	875	500	1250	450
1,200	275	400	575	400	950	375	1300	525
1,500	300	475	675	475	1050	450	1375	400
1,800	325	450	700	425	1150	425	1575	550

NO.	DATE	REVISIONS	CHECKED	APPROVED
3				
2				
1				
	CONSULTANTS		DEDE	

KINGDOM OF THAILAND
Department of Alternative Energy Development and Efficiency
MINISTRY OF ENERGY

KLONG LAM PLOK HYDROPOWER PROJECT

CIVIL WORKS AND TRANSMISSION LINE
HEADRACE
FITTINGS FOR STEEL PIPE

P&C MANAGEMENT CO.,LTD.

DESIGNED 28.29074 28.6226
DRAWN
CHECKED 28.6226
PROJECT MANAGER 08/03/2559 DATE

Department of Alternative Energy Development and Efficiency
MINISTRY OF ENERGY
REVIEWED
SUBMITTED
RECOMMENDED
APPROVED P. Hanwat

DRAWING NO. KLP-HR-09
SHEET NO. 32 OF 110

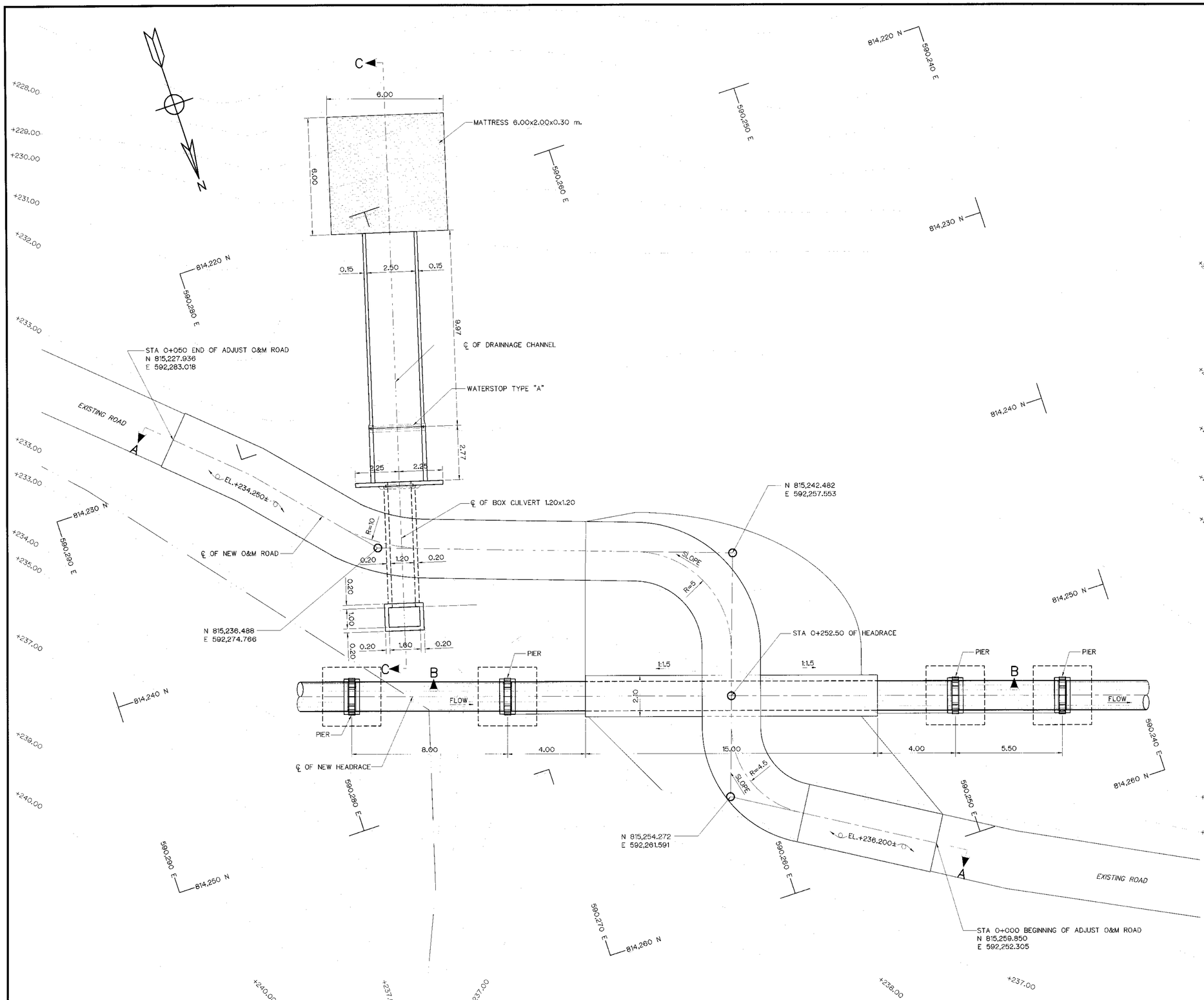

NOTES :

1. ALL DIMENSIONS AND ELEVATIONS (M.S.L.) ARE IN METERS. UNLESS OTHERWISE SHOWN.
2. SYMBOLS, ABBREVIATIONS AND GENERAL NOTES SEE DWG. NO. KLP-GN-03
3. THE ALIGNMENT OF THE HEADRACE AND RELATED STRUCTURES SHALL BE CHECK AND CORRECTED BY THE CONTRACTOR TO SUIT THE FIELD CONDITIONS AND SHALL BE SUBMITTED TO DEDE'S FIELD ENGINEER FOR APPROVAL

REFERENCE DRAWINGS :

1. HEADRACE PLAN AND PROFILE, STA. 0+000 TO STA. 0+500	KLP-HR-03
2. HEADRACE ROAD CROSSING, STA 0+252.50 SECTIONS	KLP-HR-11
3. HEADRACE CONCRETE PIER SECTION AND DETAILS	KLP-HR-08

0 1.0 2.0 4.0 6.0 8.0
SCALE 1:100 METERS

PLAN
SCALE 1:100

NO.	DATE	REVISIONS	CHECKED	APPROVED
3				
2				
1				

CONSULTANTS | DEDE

KINGDOM OF THAILAND
Department of Alternative Energy Development and Efficiency
MINISTRY OF ENERGY

KLONG LAM PLOK HYDROPOWER PROJECT

CIVIL WORKS AND TRANSMISSION LINE
HEADRACE
ROAD CROSSING, STA 0+252.50 PLAN

P&C MANAGEMENT CO.,LTD.

Department of Alternative Energy Development and Efficiency
MINISTRY OF ENERGY

DESIGNED 28.29074 28.6226
DRAWN
CHECKED 28.6226
PROJECT MANAGER 08/03/2559 DATE

REVIEWED
SUBMITTED
RECOMMENDED
APPROVED P. Hanuk

DRAWING NO. KLP-HR-10
SHEET NO. 33 OF 110

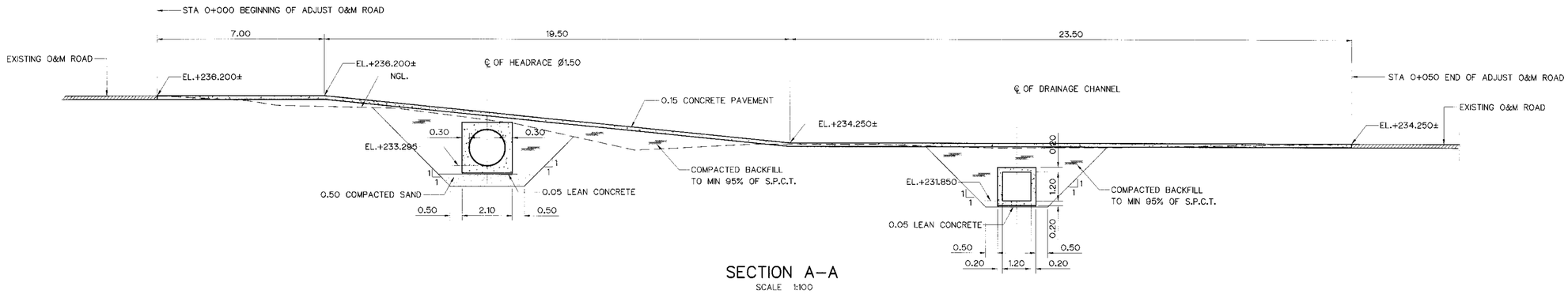

SECTION A–A

SCALE 1:100

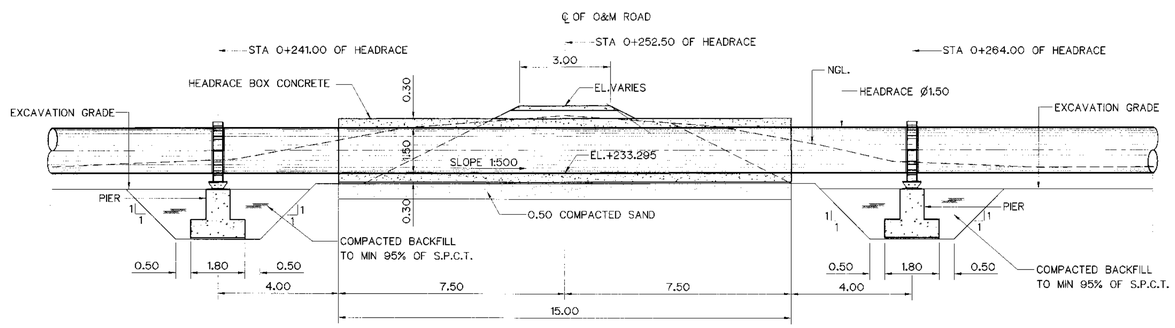

SECTION B–B

SCALE 1:100

NOTES :

1. ALL DIMENSIONS AND ELEVATIONS (M.S.L.) ARE IN METERS. UNLESS OTHERWISE SHOWN.
2. SYMBOLS, ABBREVIATIONS AND GENERAL NOTES SEE DWG. NO. KLP–GN–03
3. THE ALIGNMENT OF THE HEADRACE AND RELATED STRUCTURES SHALL BE CHECK AND CORRECTED BY THE CONTRACTOR TO SUIT THE FIELD CONDITIONS AND SHALL BE SUBMITTED TO DEDE'S FIELD ENGINEER FOR APPROVAL

REFERENCE DRAWINGS :

1. HEADRACE ROAD CROSSING, STA 0+252.50 PLAN	KLP–HR–10
2. HEADRACE BOX CONCRETE	KLP–HR–08
3. INLET AND OUTLET TRANSITION	KLP–HR–21

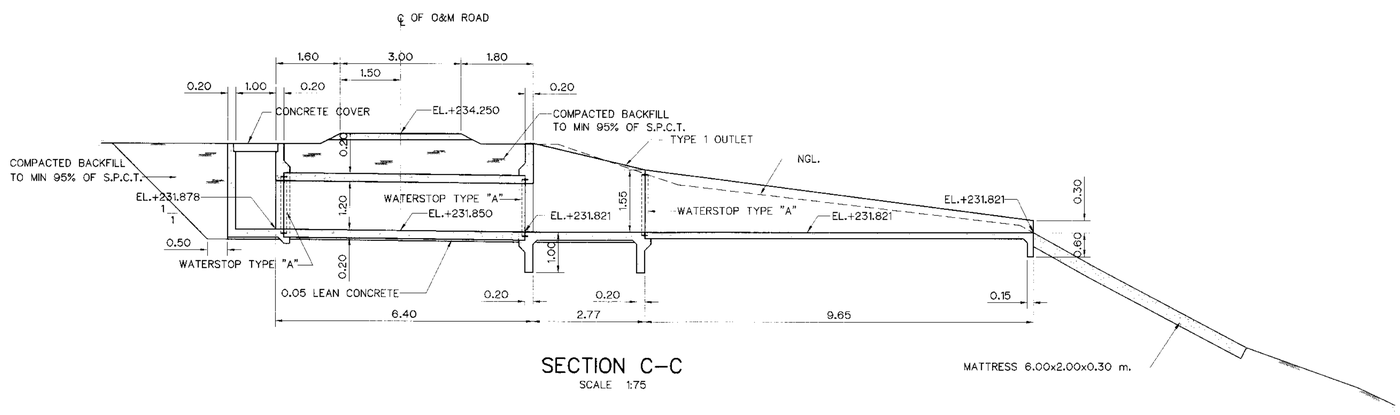

SECTION C–C

SCALE 1:75

0 1 2 3 4 5 6
SCALE 1:75 METERS

0 1.0 2.0 4.0 6.0 8.0
SCALE 1:100 METERS

KINGDOM OF THAILAND
Department of Alternative Energy Development and Efficiency
MINISTRY OF ENERGY

KLONG LAM PLOK HYDROPOWER PROJECT

CIVIL WORKS AND TRANSMISSION LINE
HEADRACE
ROAD CROSSING, STA 0+252.50 SECTIONS

NO.	DATE	REVISIONS	CHECKED	APPROVED
3				
2				
1				

CONSULTANTS — DEDE

P&C MANAGEMENT CO.,LTD.

DESIGNED 28.29074 28.6226
DRAWN
CHECKED 28.6226
PROJECT MANAGER 08/03/2559 DATE

Department of Alternative Energy Development and Efficiency
MINISTRY OF ENERGY
REVIEWED
SUBMITTED
RECOMMENDED
APPROVED

DRAWING NO. KLP–HR–11
SHEET NO. 34 OF 110

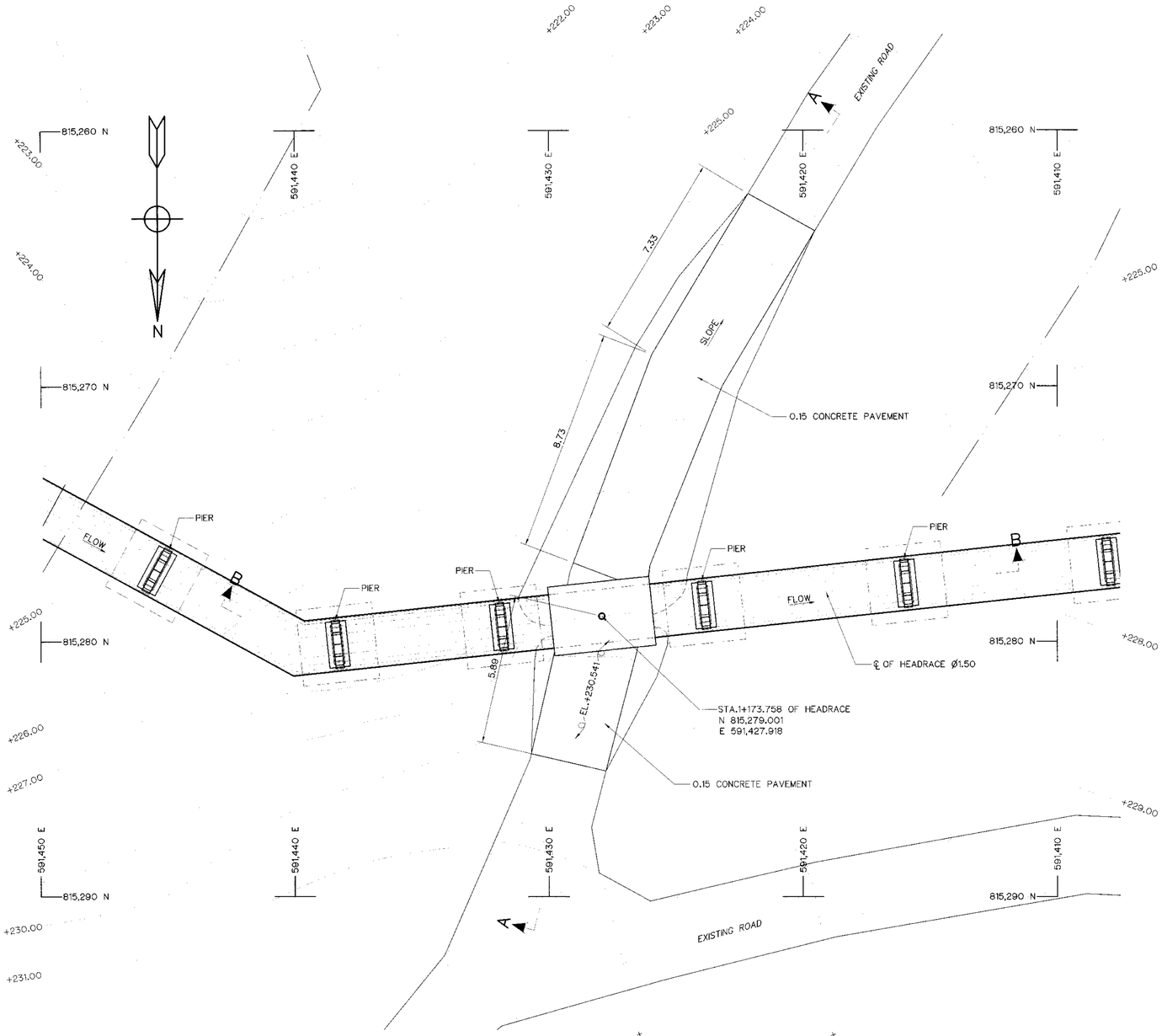

PLAN
SCALE 1:100

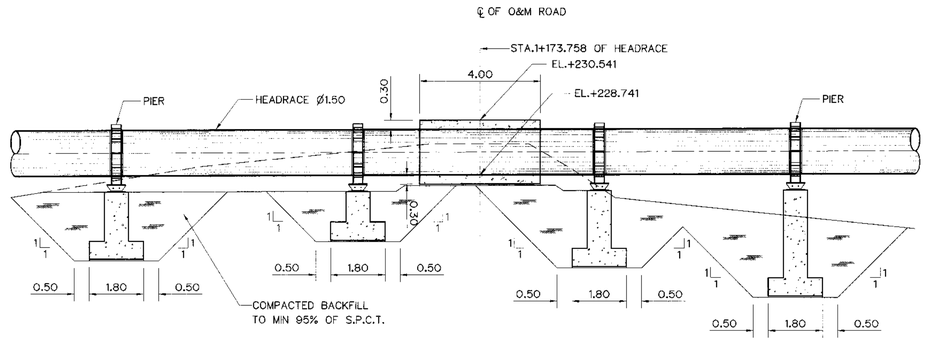

SECTION B–B
SCALE 1:100

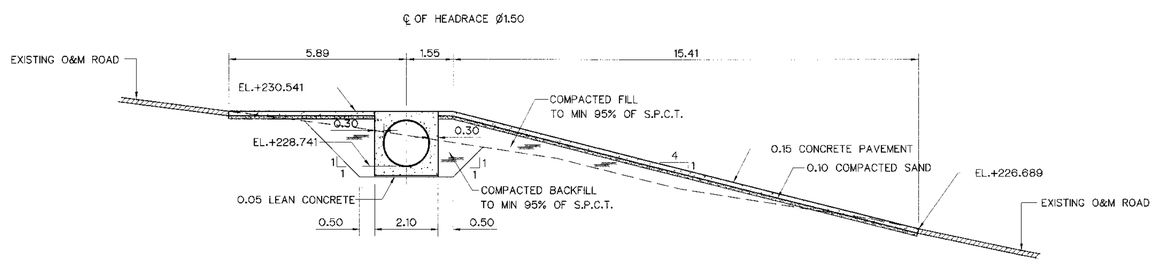

SECTION A–A
SCALE 1:100

NOTES :

1. ALL DIMENSIONS AND ELEVATIONS (M.S.L.) ARE IN METERS. UNLESS OTHERWISE SHOWN.
2. SYMBOLS, ABBREVIATIONS AND GENERAL NOTES SEE DWG. NO. KLP–GN–03
3. THE ALIGNMENT OF THE HEADRACE AND RELATED STRUCTURES SHALL BE CHECK AND CORRECTED BY THE CONTRACTOR TO SUIT THE FIELD CONDITIONS AND SHALL BE SUBMITTED TO DEDE'S FIELD ENGINEER FOR APPROVAL

REFERENCE DRAWINGS :

1. HEADRACE PLAN AND PROFILE, STA. 1+000 TO STA. 1+459.506 — KLP–HR–05
2. HEADRACE CONCRETE PIER SECTIONS AND DETAILS — KLP–HR–08

0 1.0 2.0 4.0 6.0 8.0
SCALE 1:100 METERS

NO.	DATE	REVISIONS	CHECKED	APPROVED
3				
2				
1				

CONSULTANTS | DEDE

KINGDOM OF THAILAND
Department of Alternative Energy Development and Efficiency
MINISTRY OF ENERGY

KLONG LAM PLOK HYDROPOWER PROJECT

CIVIL WORKS AND TRANSMISSION LINE
HEADRACE
ROAD CROSSING, STA STA.1+173.758 PLAN AND SECTIONS

P&C MANAGEMENT CO.,LTD.

Department of Alternative Energy Development and Efficiency
MINISTRY OF ENERGY

DESIGNED	สิน.29074	สิน.6226
DRAWN		
CHECKED		สิน.6226
PROJECT MANAGER	08/03/2559 DATE	

REVIEWED
SUBMITTED
RECOMMENDED
APPROVED

DRAWING NO. KLP–HR–12
SHEET NO. 35 OF 110

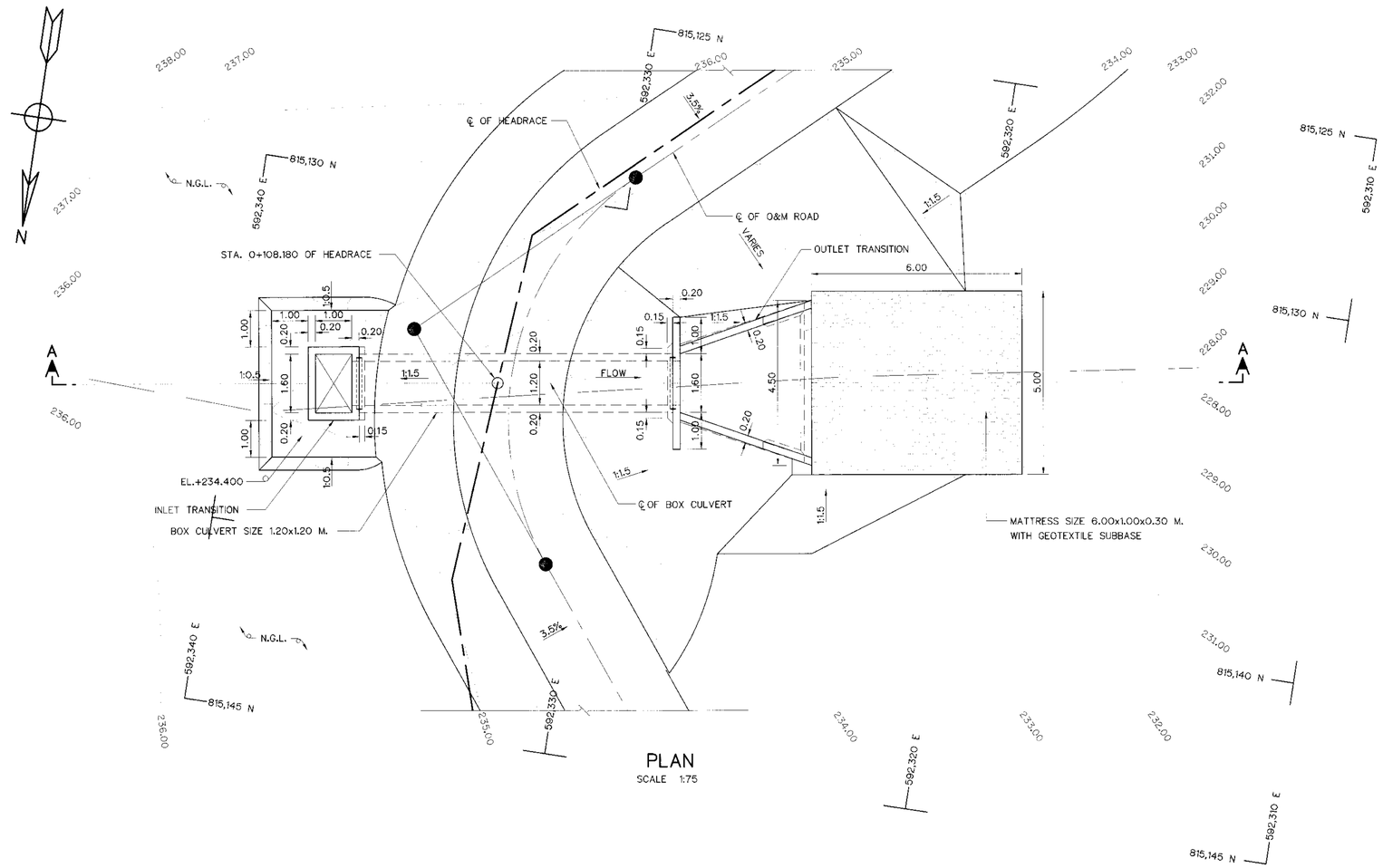

PLAN

SCALE 1:75

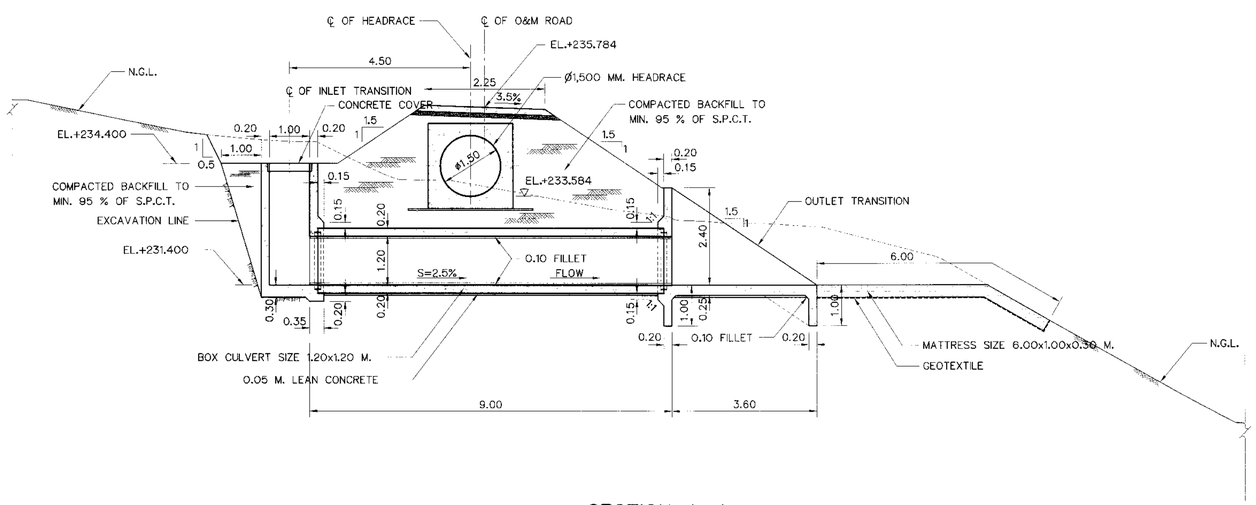

SECTION A–A

SCALE 1:75

NOTES :

1. ALL DIMENSIONS AND ELEVATIONS (M.S.L.) ARE IN METERS. UNLESS OTHERWISE SHOWN.
2. SYMBOLS, ABBREVIATIONS AND GENERAL NOTES SEE DWG. NO. KLP-GN-03
3. THE ALIGNMENT OF THE HEADRACE AND RELATED STRUCTURES SHALL BE CHECK AND CORRECTED BY THE CONTRACTOR TO SUIT THE FIELD CONDITIONS AND SHALL BE SUBMITTED TO DEDE'S FIELD ENGINEER FOR APPROVAL

REFERENCE DRAWINGS :

1. HEADRACE PLAN AND PROFILE, STA. 0+000 TO STA. 0+500	KLP-HR-03
2. HEADRACE DRAIN CULVERT DETAILS OF REINFORCEMENT	KLP-HR-21
3. HEADRACE TYPICAL SECTIONS AND DETAIL	KLP-HR-06

0 1 2 3 4 5 6

SCALE 1:75 METERS

KINGDOM OF THAILAND
Department of Alternative Energy Development and Efficiency
MINISTRY OF ENERGY

KLONG LAM PLOK HYDROPOWER PROJECT

CIVIL WORKS AND TRANSMISSION LINE
HEADRACE
DRAIN CULVERT STA. 0+108.180 , PLAN AND SECTION

NO.	DATE	REVISIONS	CHECKED	APPROVED
3				
2				
1				

CONSULTANTS DEDE

P&C MANAGEMENT CO.,LTD.

DESIGNED ณัฐ.29074 ณัฐ.6226
DRAWN
CHECKED ณัฐ.6226
PROJECT MANAGER 08/03/2559 DATE

Department of Alternative Energy Development and Efficiency
MINISTRY OF ENERGY

REVIEWED
SUBMITTED
RECOMMENDED
APPROVED P. Hanall.

DRAWING NO. KLP-HR-13

SHEET NO. 36 OF 110

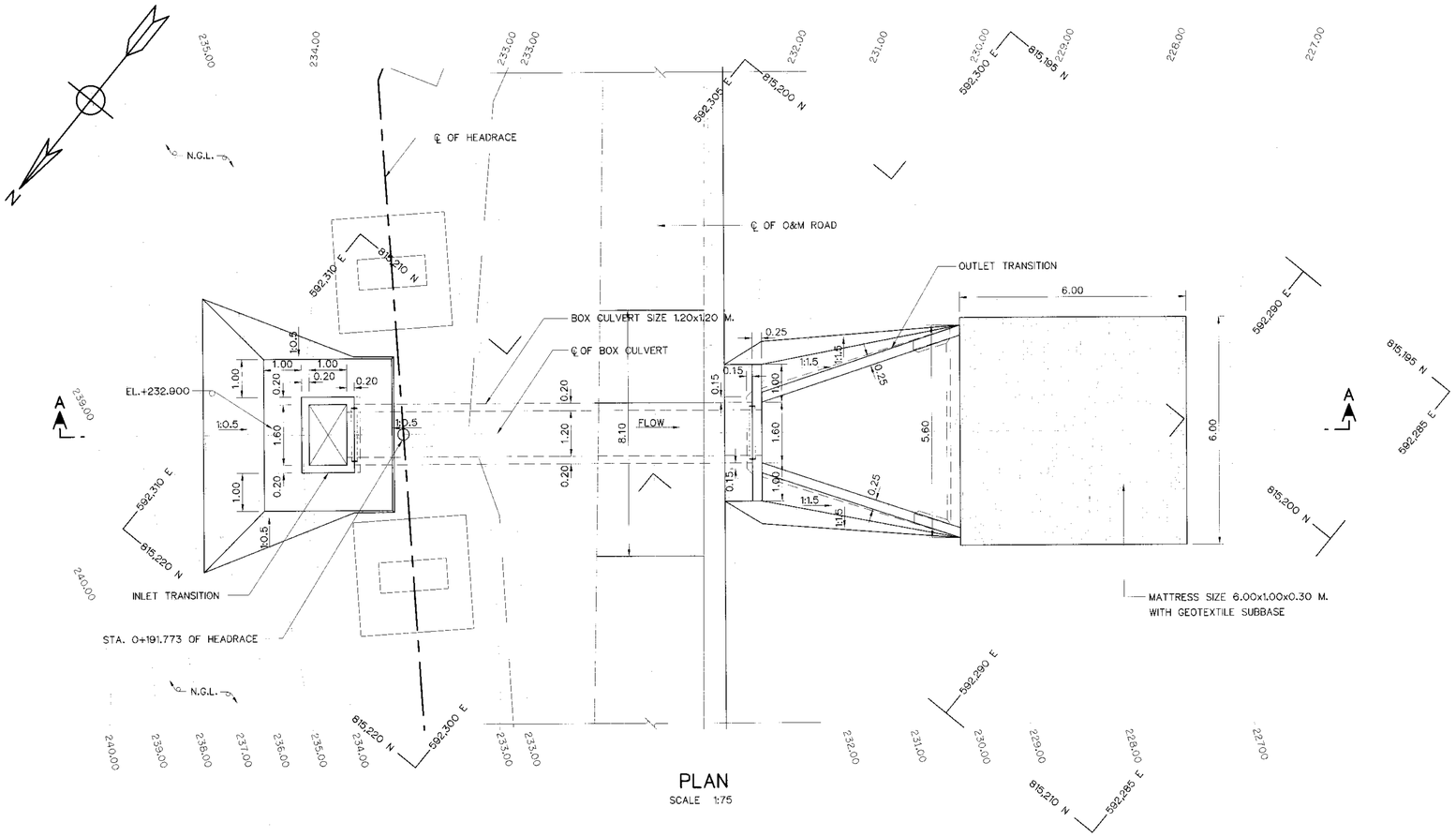

PLAN

SCALE 1:75

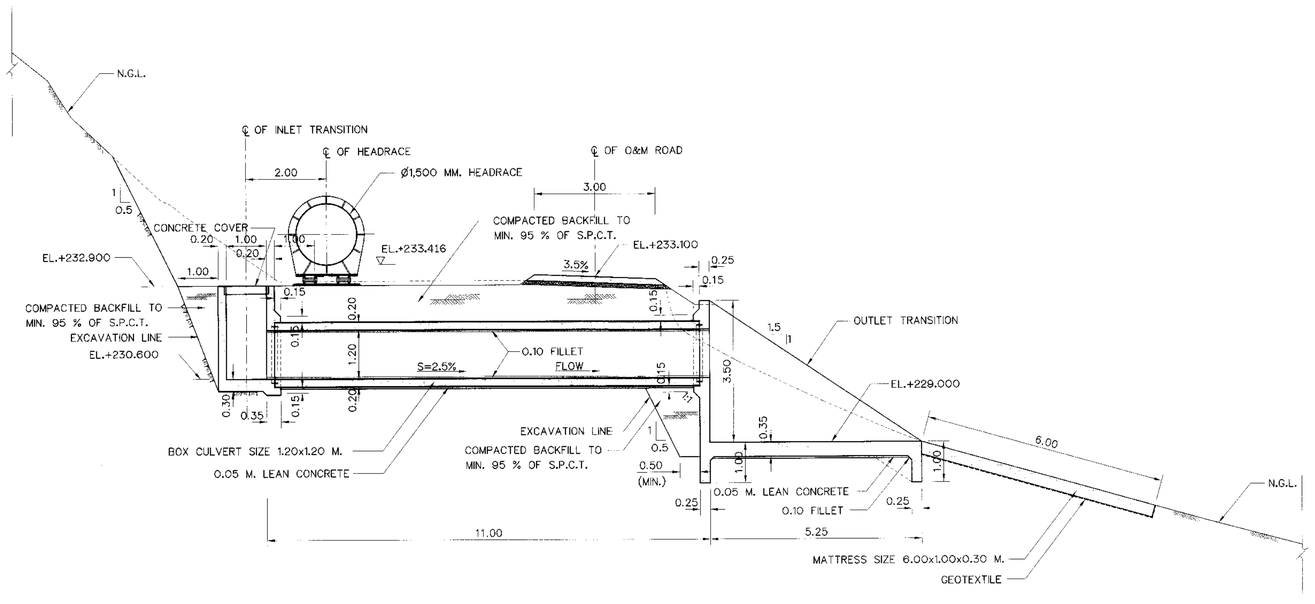

SECTION A–A

SCALE 1:75

NOTES :

1. ALL DIMENSIONS AND ELEVATIONS (M.S.L.) ARE IN METERS. UNLESS OTHERWISE SHOWN.
2. SYMBOLS, ABBREVIATIONS AND GENERAL NOTES SEE DWG. NO. KLP–GN–03
3. THE ALIGNMENT OF THE HEADRACE AND RELATED STRUCTURES SHALL BE CHECK AND CORRECTED BY THE CONTRACTOR TO SUIT THE FIELD CONDITIONS AND SHALL BE SUBMITTED TO DEDE'S FIELD ENGINEER FOR APPROVAL

REFERENCE DRAWINGS :

1. HEADRACE PLAN AND PROFILE, STA. 0+000 TO STA. 0+500	KLP–HR–03
2. HEADRACE DRAIN CULVERT DETAILS OF REINFORCEMENT	KLP–HR–21
3. HEADRACE TYPICAL SECTIONS AND DETAIL	KLP–HR–06

0 1 2 3 4 5 6

SCALE 1:75 METERS

NO.	DATE	REVISIONS	CHECKED	APPROVED
3				
2				
1				

CONSULTANTS | DEDE

KINGDOM OF THAILAND
Department of Alternative Energy Development and Efficiency
MINISTRY OF ENERGY

KLONG LAM PLOK HYDROPOWER PROJECT

CIVIL WORKS AND TRANSMISSION LINE
HEADRACE
DRAIN CULVERT STA. 0+191.773 , PLAN AND SECTION

P&C MANAGEMENT CO.,LTD.

Department of Alternative Energy Development and Efficiency
MINISTRY OF ENERGY

DESIGNED	ส.ป.29074	ส.ป.6226	REVIEWED
DRAWN			SUBMITTED
CHECKED		ส.ป.6226	RECOMMENDED
			APPROVED

PROJECT MANAGER 08/03/2559 DATE

DRAWING NO. KLP–HR–14

SHEET NO. 37 OF 110

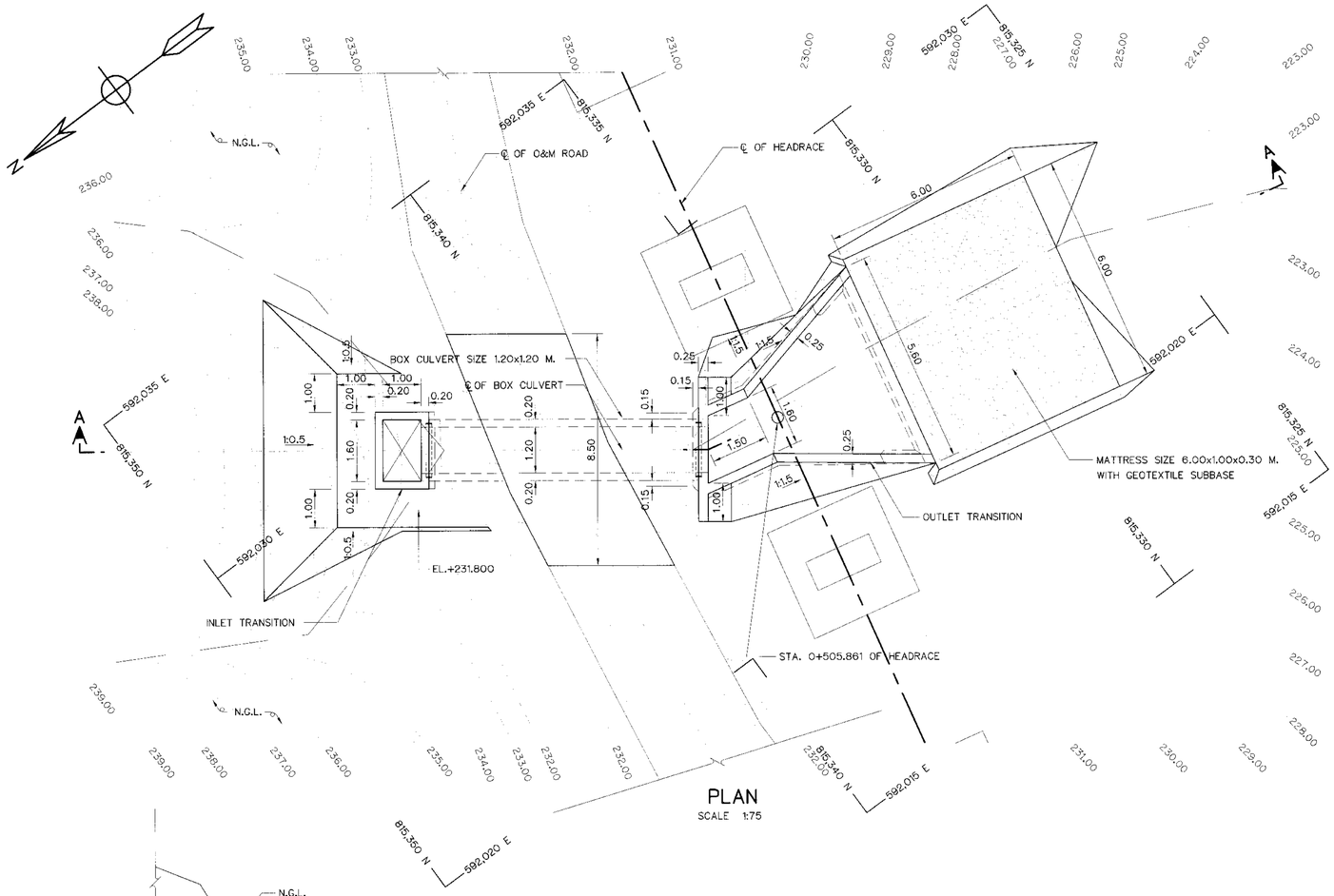

PLAN

SCALE 1:75

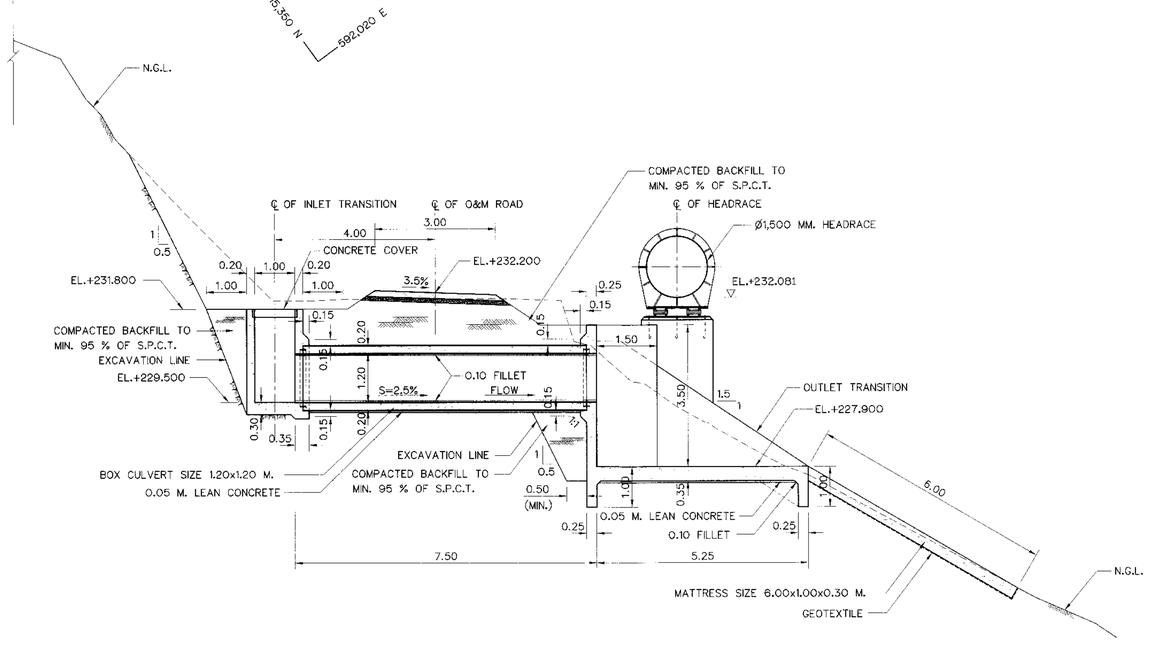

SECTION A–A

SCALE 1:75

NOTES :

1. ALL DIMENSIONS AND ELEVATIONS (M.S.L.) ARE IN METERS. UNLESS OTHERWISE SHOWN.
2. SYMBOLS, ABBREVIATIONS AND GENERAL NOTES SEE DWG. NO. KLP–GN–03
3. THE ALIGNMENT OF THE HEADRACE AND RELATED STRUCTURES SHALL BE CHECK AND CORRECTED BY THE CONTRACTOR TO SUIT THE FIELD CONDITIONS AND SHALL BE SUBMITTED TO DEDE'S FIELD ENGINEER FOR APPROVAL

REFERENCE DRAWINGS :

1. HEADRACE PLAN AND PROFILE, STA. 0+500 TO STA. 1+000	KLP–HR–04
2. HEADRACE DRAIN CULVERT DETAILS OF REINFORCEMENT	KLP–HR–21
3. HEADRACE TYPICAL SECTIONS AND DETAIL	KLP–HR–06

0 1 2 3 4 5 6

SCALE 1:75 METERS

KINGDOM OF THAILAND
Department of Alternative Energy Development and Efficiency
MINISTRY OF ENERGY

KLONG LAM PLOK HYDROPOWER PROJECT

CIVIL WORKS AND TRANSMISSION LINE
HEADRACE
DRAIN CULVERT STA. 0+505.861 , PLAN AND SECTION

NO.	DATE	REVISIONS	CHECKED	APPROVED
3				
2				
1				

CONSULTANTS — DEDE

P&C MANAGEMENT CO.,LTD.

DESIGNED 28.29074 28.6226
DRAWN
CHECKED 28.6226
PROJECT MANAGER 08/03/2559 DATE

Department of Alternative Energy Development and Efficiency MINISTRY OF ENERGY
REVIEWED
SUBMITTED
RECOMMENDED
APPROVED

DRAWING NO. KLP–HR–15
SHEET NO. 38 OF 110

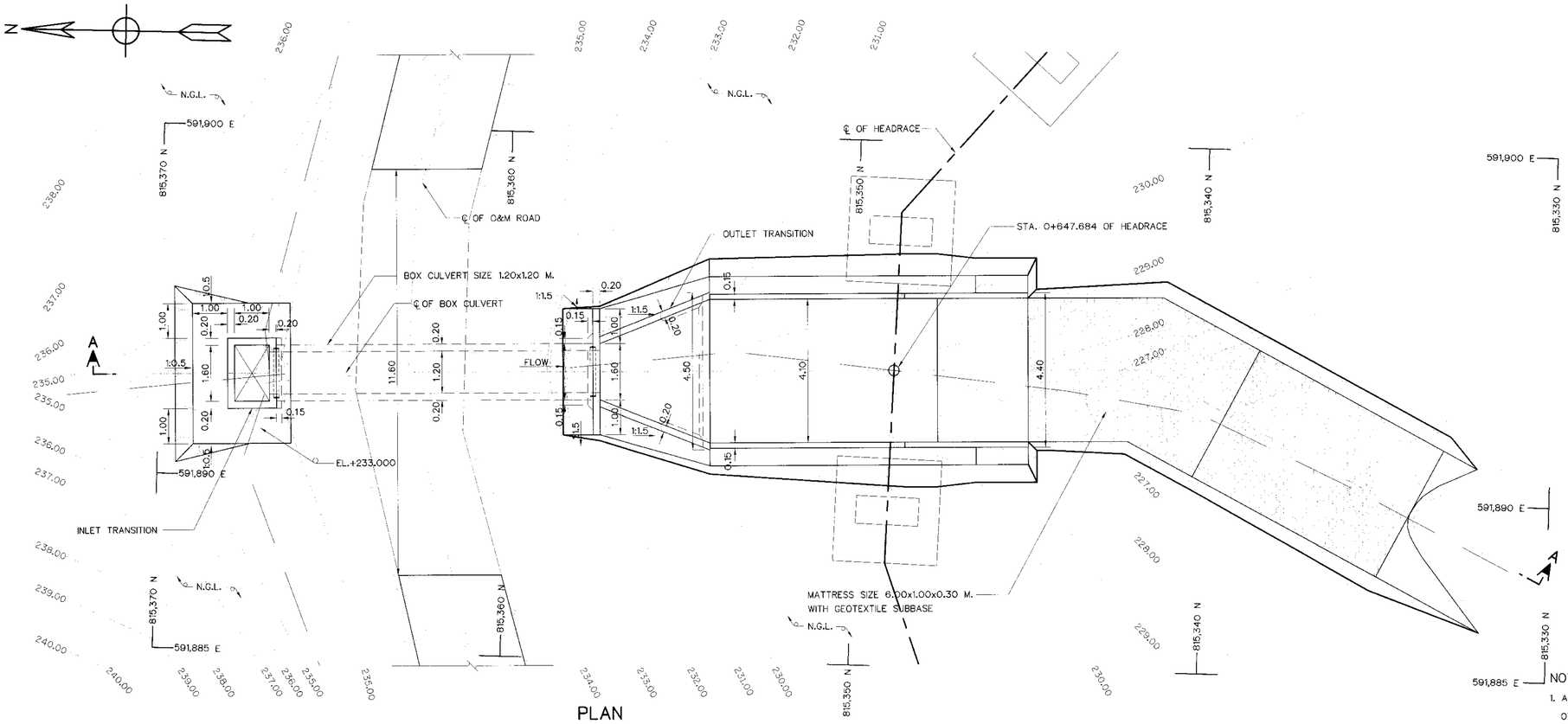

PLAN

SCALE 1:75

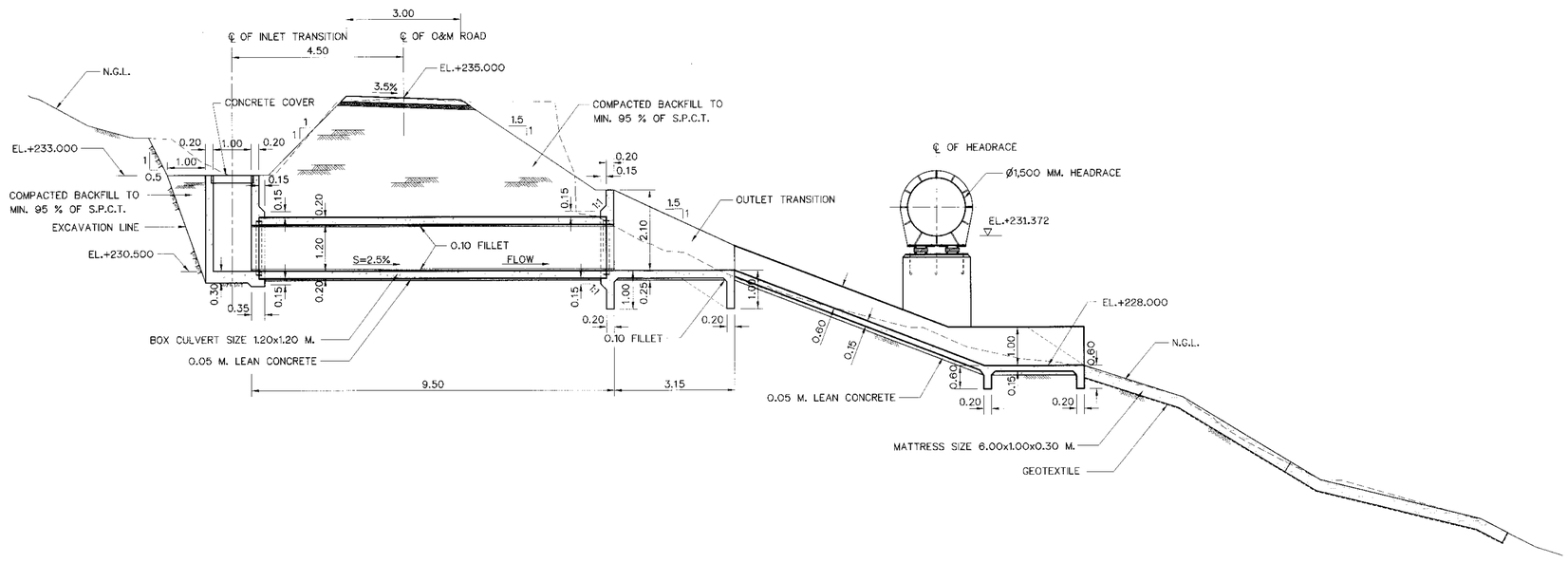

SECTION A–A

SCALE 1:75

NOTES :

1. ALL DIMENSIONS AND ELEVATIONS (M.S.L.) ARE IN METERS. UNLESS OTHERWISE SHOWN.
2. SYMBOLS, ABBREVIATIONS AND GENERAL NOTES SEE DWG. NO. KLP-GN-03
3. THE ALIGNMENT OF THE HEADRACE AND RELATED STRUCTURES SHALL BE CHECK AND CORRECTED BY THE CONTRACTOR TO SUIT THE FIELD CONDITIONS AND SHALL BE SUBMITTED TO DEDE'S FIELD ENGINEER FOR APPROVAL

REFERENCE DRAWINGS :

1. HEADRACE PLAN AND PROFILE, STA. 0+500 TO STA. 1+000	KLP-HR-04
2. HEADRACE DRAIN CULVERT DETAILS OF REINFORCEMENT	KLP-HR-21
3. HEADRACE TYPICAL SECTIONS AND DETAIL	KLP-HR-06

0 1 2 3 4 5 6
SCALE 1:75 METERS

KINGDOM OF THAILAND
Department of Alternative Energy Development and Efficiency
MINISTRY OF ENERGY

KLONG LAM PLOK HYDROPOWER PROJECT

CIVIL WORKS AND TRANSMISSION LINE
HEADRACE
DRAIN CULVERT STA. 0+647.684 , PLAN AND SECTION

NO.	DATE	REVISIONS	CHECKED	APPROVED
3				
2				
1				
	CONSULTANTS		DEDE	

P&C MANAGEMENT CO.,LTD.

DESIGNED 28.29074 28.6226
DRAWN
CHECKED 28.6226
PROJECT MANAGER 08/03/2559 DATE

Department of Alternative Energy Development and Efficiency
MINISTRY OF ENERGY
REVIEWED
SUBMITTED
RECOMMENDED
APPROVED

DRAWING NO. KLP-HR-16
SHEET NO. 39 OF 110

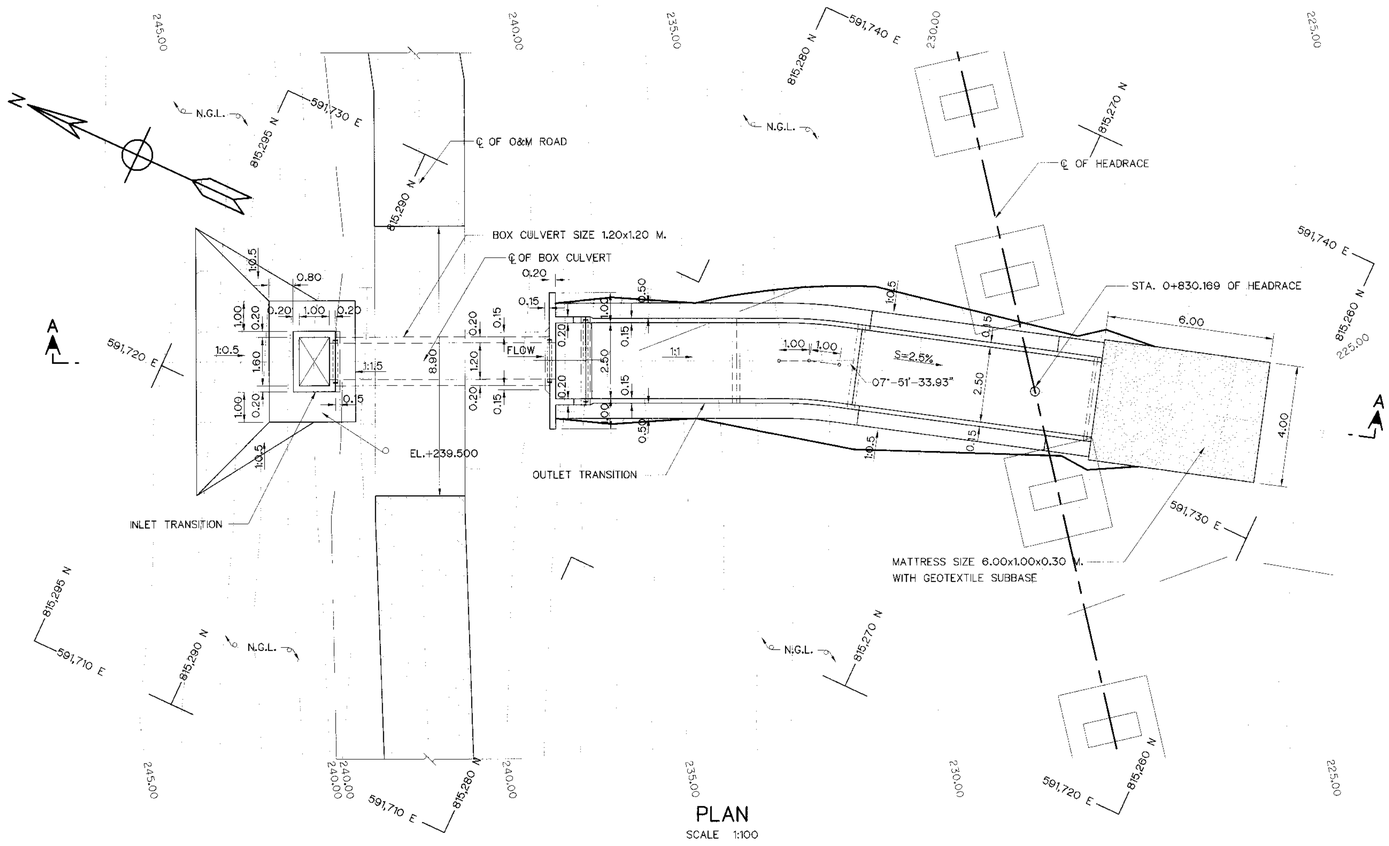

PLAN

SCALE 1:100

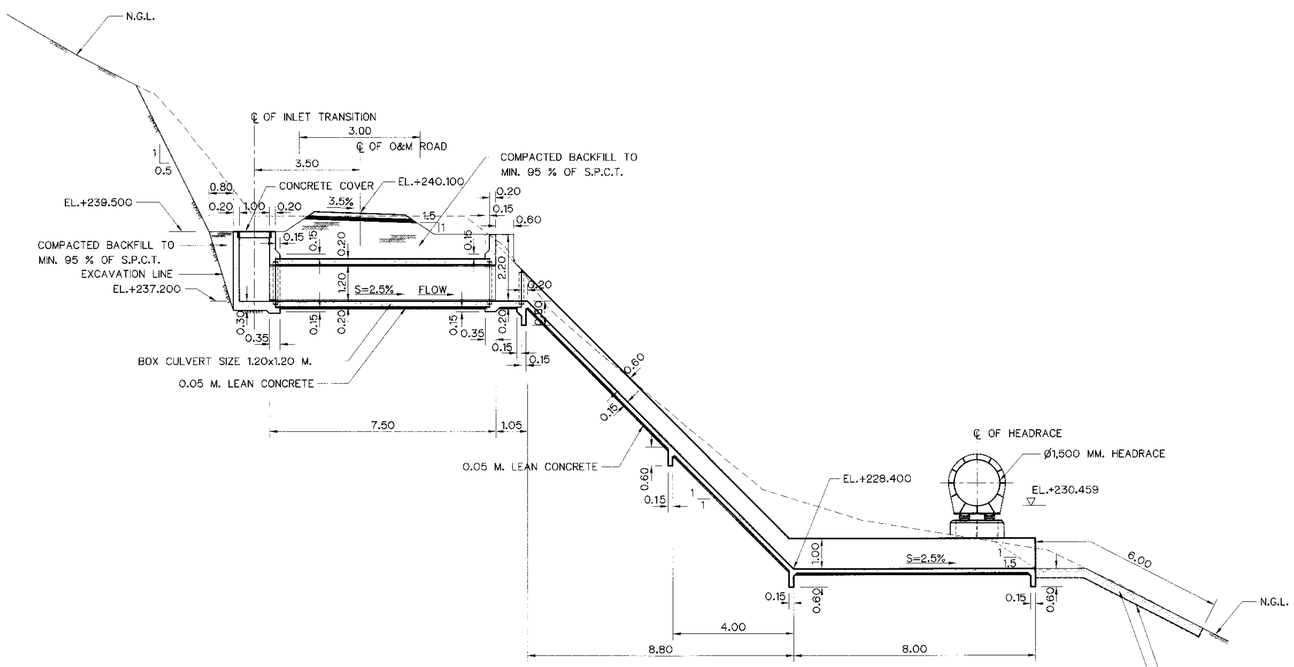

SECTION A–A

SCALE 1:100

NOTES :

1. ALL DIMENSIONS AND ELEVATIONS (M.S.L.) ARE IN METERS. UNLESS OTHERWISE SHOWN.
2. SYMBOLS, ABBREVIATIONS AND GENERAL NOTES SEE DWG. NO. KLP-GN-03
3. THE ALIGNMENT OF THE HEADRACE AND RELATED STRUCTURES SHALL BE CHECK AND CORRECTED BY THE CONTRACTOR TO SUIT THE FIELD CONDITIONS AND SHALL BE SUBMITTED TO DEDE'S FIELD ENGINEER FOR APPROVAL

REFERENCE DRAWINGS :

1. HEADRACE PLAN AND PROFILE, STA. 0+500 TO STA. 1+000	KLP-HR-04
2. HEADRACE DRAIN CULVERT DETAILS OF REINFORCEMENT	KLP-HR-21
3. HEADRACE TYPICAL SECTIONS AND DETAIL	KLP-HR-06

0 1 2 3 4 5 6 7 8

SCALE 1:100 METERS

KINGDOM OF THAILAND
Department of Alternative Energy Development and Efficiency
MINISTRY OF ENERGY

KLONG LAM PLOK HYDROPOWER PROJECT

CIVIL WORKS AND TRANSMISSION LINE
HEADRACE
DRAIN CULVERT STA. 0+830.169 , PLAN AND SECTION

NO.	DATE	REVISIONS	CHECKED	APPROVED
3				
2				
1				

CONSULTANTS | DEDE

P&C MANAGEMENT CO.,LTD.

DESIGNED ศิริ.29074 ศิริ.6226
DRAWN
CHECKED ศิริ.6226
PROJECT MANAGER 08/03/2559 DATE

Department of Alternative Energy Development and Efficiency MINISTRY OF ENERGY
REVIEWED
SUBMITTED
RECOMMENDED
APPROVED P. Hanwell

DRAWING NO. KLP-HR-17
SHEET NO. 40 OF 110

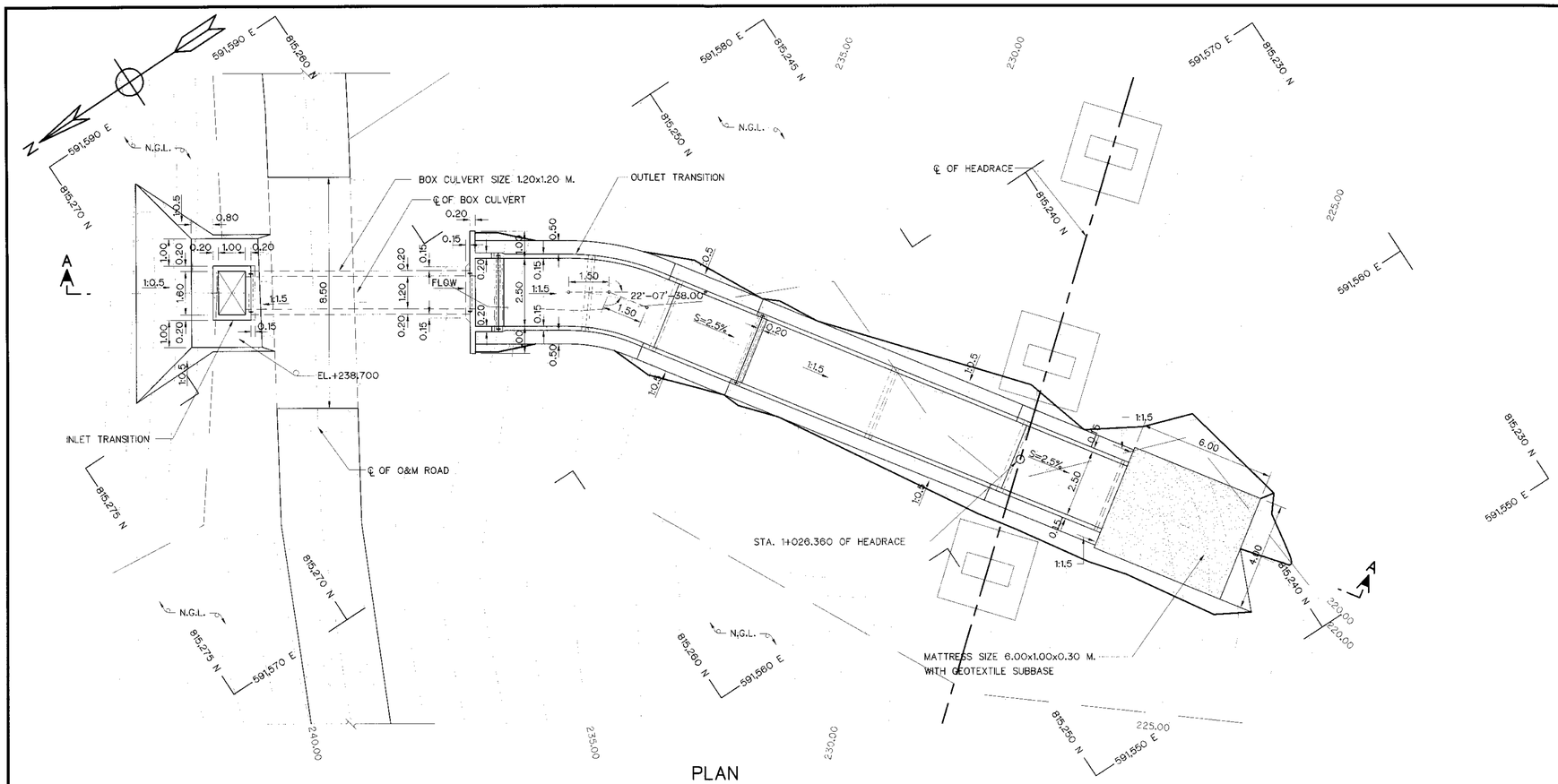

PLAN
SCALE 1:100

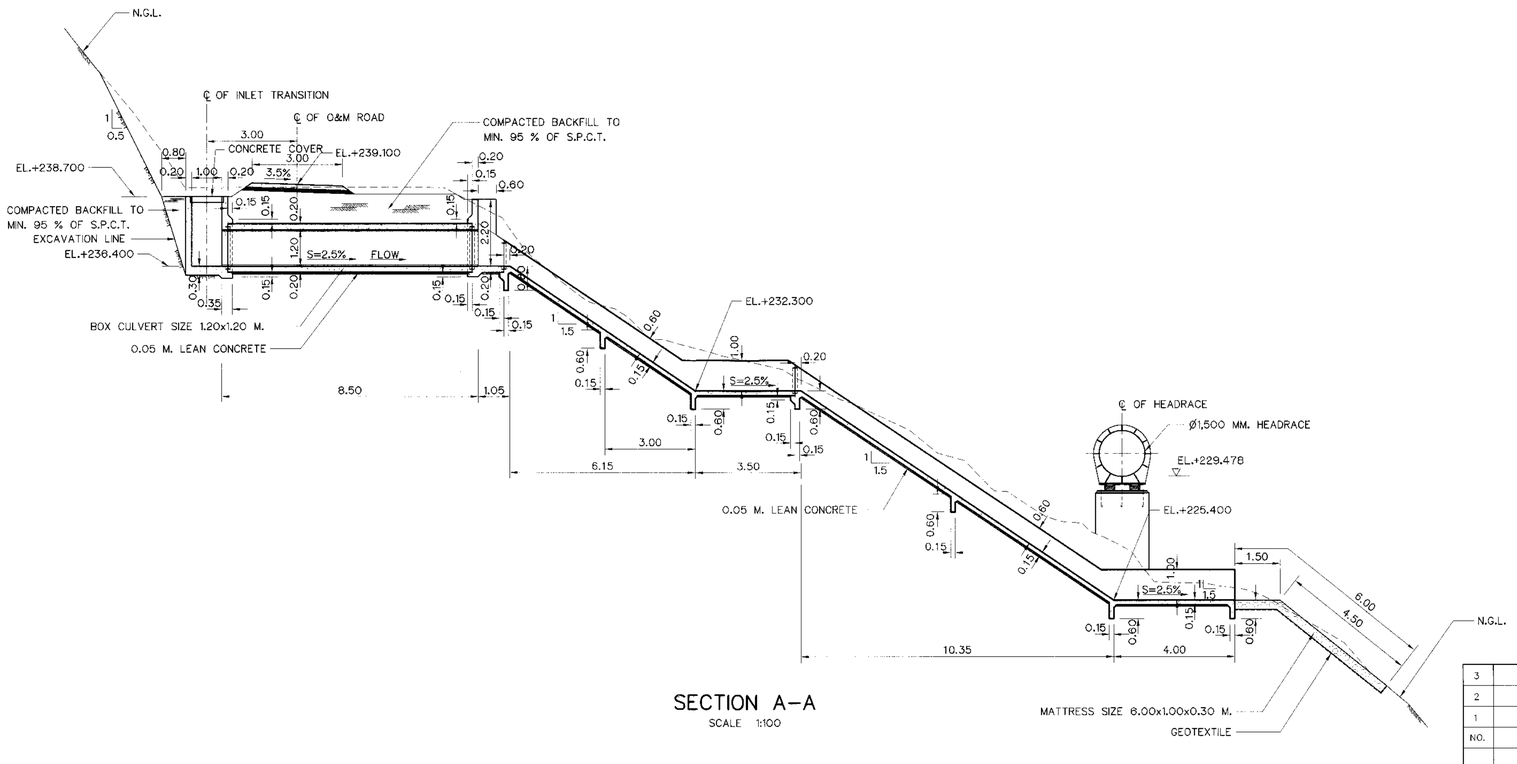

SECTION A-A
SCALE 1:100

NOTES :

1. ALL DIMENSIONS AND ELEVATIONS (M.S.L.) ARE IN METERS. UNLESS OTHERWISE SHOWN.
2. SYMBOLS, ABBREVIATIONS AND GENERAL NOTES SEE DWG. NO. KLP-GN-03
3. THE ALIGNMENT OF THE HEADRACE AND RELATED STRUCTURES SHALL BE CHECK AND CORRECTED BY THE CONTRACTOR TO SUIT THE FIELD CONDITIONS AND SHALL BE SUBMITTED TO DEDE'S FIELD ENGINEER FOR APPROVAL

REFERENCE DRAWINGS :

1. HEADRACE PLAN AND PROFILE, STA. 1+000 TO STA. 1+459.506	KLP-HR-05
2. HEADRACE DRAIN CULVERT DETAILS OF REINFORCEMENT	KLP-HR-21
3. HEADRACE TYPICAL SECTIONS AND DETAIL	KLP-HR-06

0 1 2 3 4 5 6 7 8
SCALE 1:100 METERS

KINGDOM OF THAILAND
Department of Alternative Energy Development and Efficiency
MINISTRY OF ENERGY

KLONG LAM PLOK HYDROPOWER PROJECT

CIVIL WORKS AND TRANSMISSION LINE
HEADRACE
DRAIN CULVERT STA. 1+026.360 , PLAN AND SECTION

NO.	DATE	REVISIONS	CHECKED	APPROVED
3				
2				
1				

CONSULTANTS | DEDE

P&C MANAGEMENT CO.,LTD.

DESIGNED วิฑูรย์ 28.6226
DRAWN
CHECKED วิฑูรย์ 28.6226
PROJECT MANAGER 08/03/2559 DATE

Department of Alternative Energy Development and Efficiency
MINISTRY OF ENERGY
REVIEWED
SUBMITTED
RECOMMENDED
APPROVED

DRAWING NO. KLP-HR-18
SHEET NO. 41 OF 110

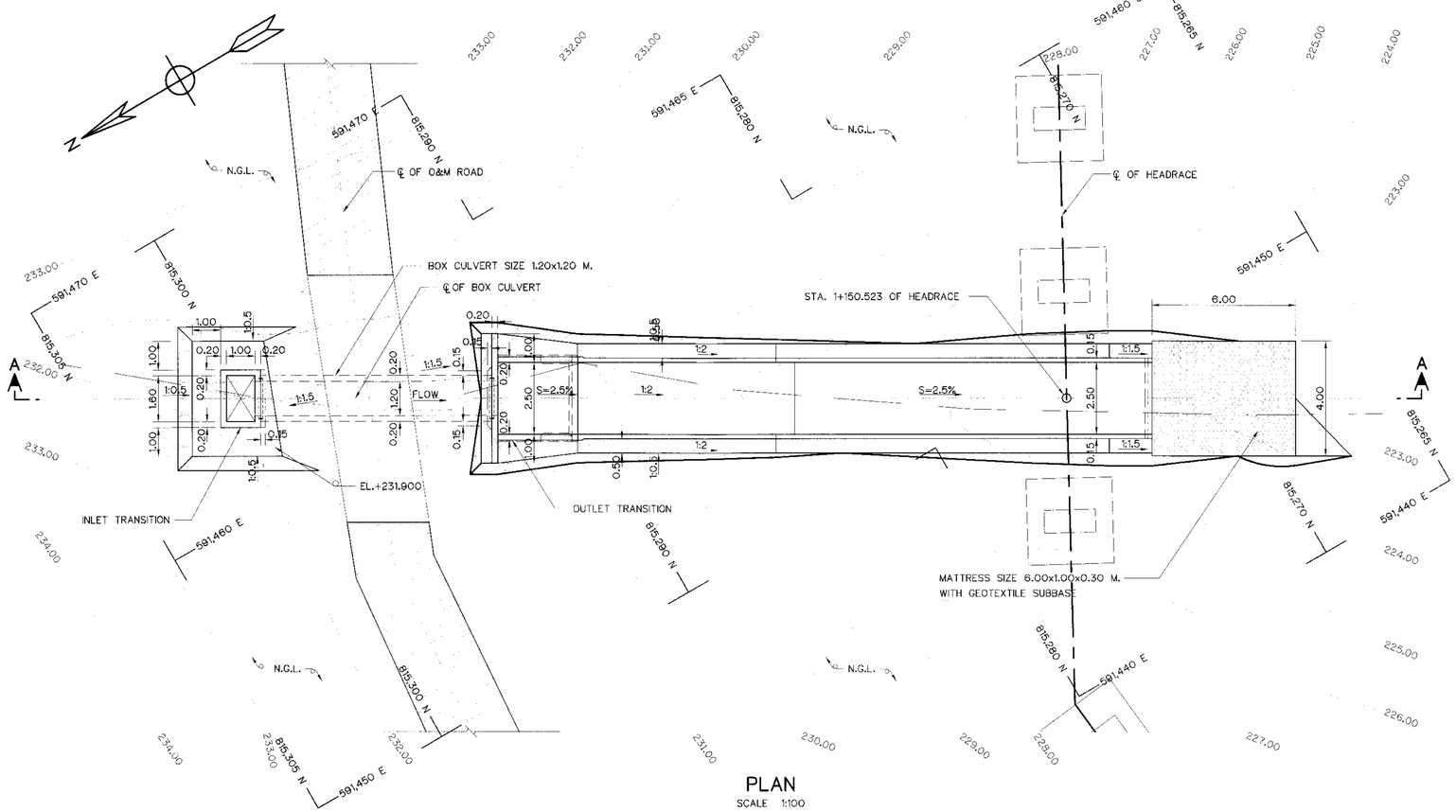

PLAN

SCALE 1:100

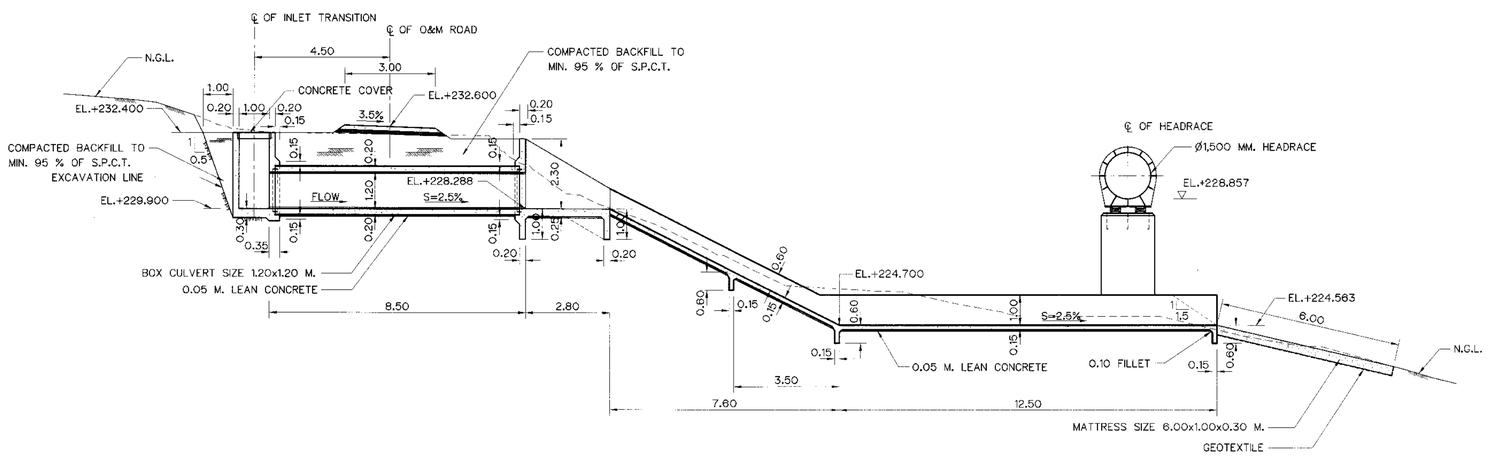

SECTION A–A

SCALE 1:100

NOTES :

1. ALL DIMENSIONS AND ELEVATIONS (M.S.L.) ARE IN METERS. UNLESS OTHERWISE SHOWN.
2. SYMBOLS, ABBREVIATIONS AND GENERAL NOTES SEE DWG. NO. KLP-GN-03
3. THE ALIGNMENT OF THE HEADRACE AND RELATED STRUCTURES SHALL BE CHECK AND CORRECTED BY THE CONTRACTOR TO SUIT THE FIELD CONDITIONS AND SHALL BE SUBMITTED TO DEDE'S FIELD ENGINEER FOR APPROVAL

REFERENCE DRAWINGS :

1. HEADRACE PLAN AND PROFILE, STA. 1+000 TO STA. 1+459.506	KLP-HR-05
2. HEADRACE DRAIN CULVERT DETAILS OF REINFORCEMENT	KLP-HR-21
3. HEADRACE TYPICAL SECTIONS AND DETAIL	KLP-HR-06

0 1 2 3 4 5 6 7 8

SCALE 1:100 METERS

KINGDOM OF THAILAND
Department of Alternative Energy Development and Efficiency
MINISTRY OF ENERGY

KLONG LAM PLOK HYDROPOWER PROJECT

CIVIL WORKS AND TRANSMISSION LINE
HEADRACE
DRAIN CULVERT STA. 1+150.523 , PLAN AND SECTION

NO.	DATE	REVISIONS	CHECKED	APPROVED
3				
2				
1				

CONSULTANTS | DEDE

P&C MANAGEMENT CO.,LTD.

DESIGNED ศิริ.29074 ศิริ.6226
DRAWN
CHECKED ศิริ.6226
PROJECT MANAGER 08/03/2559 DATE

Department of Alternative Energy Development and Efficiency MINISTRY OF ENERGY
REVIEWED
SUBMITTED
RECOMMENDED
APPROVED

DRAWING NO. KLP-HR-19

SHEET NO. 42 OF 110

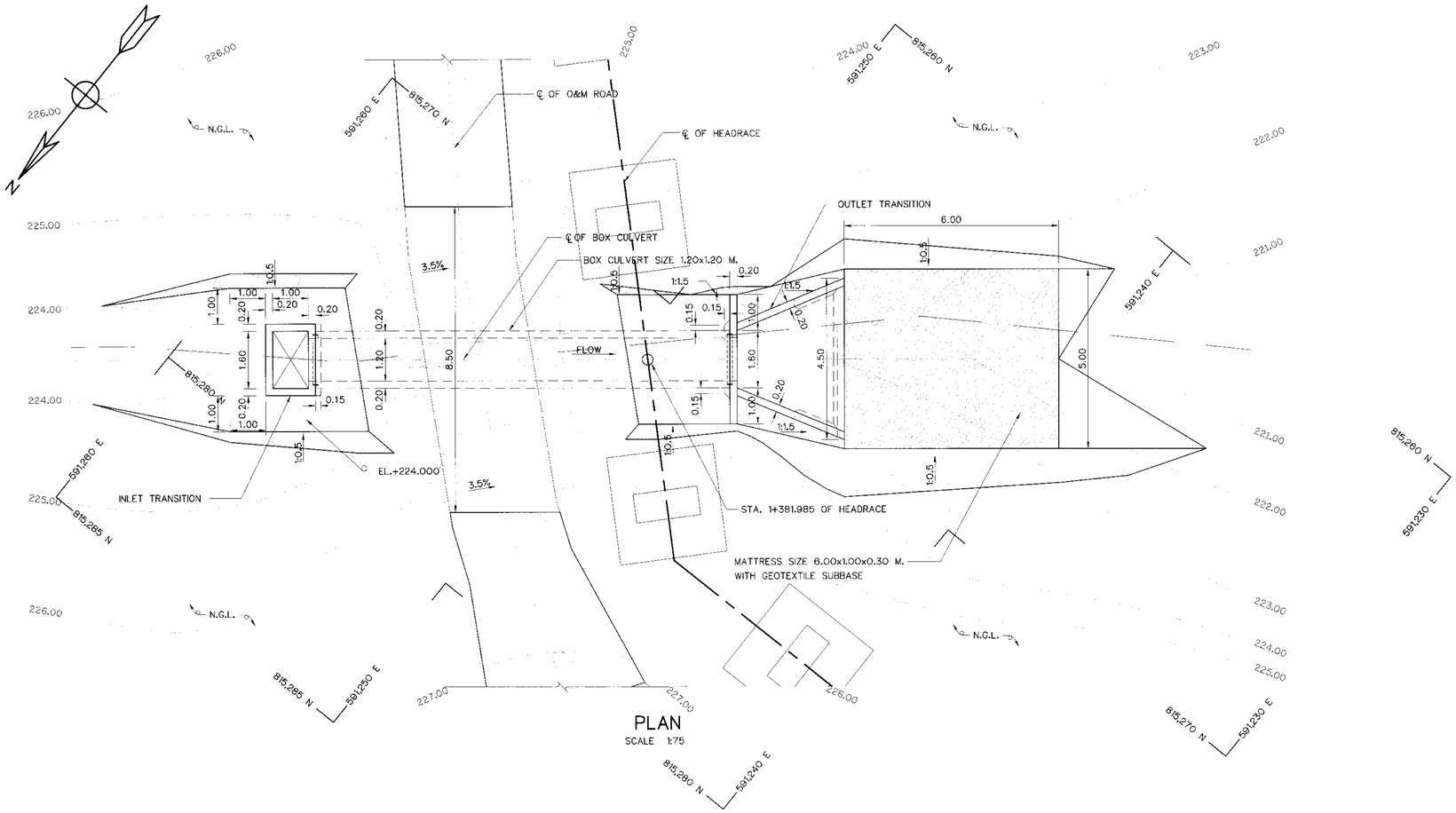

PLAN

SCALE 1:75

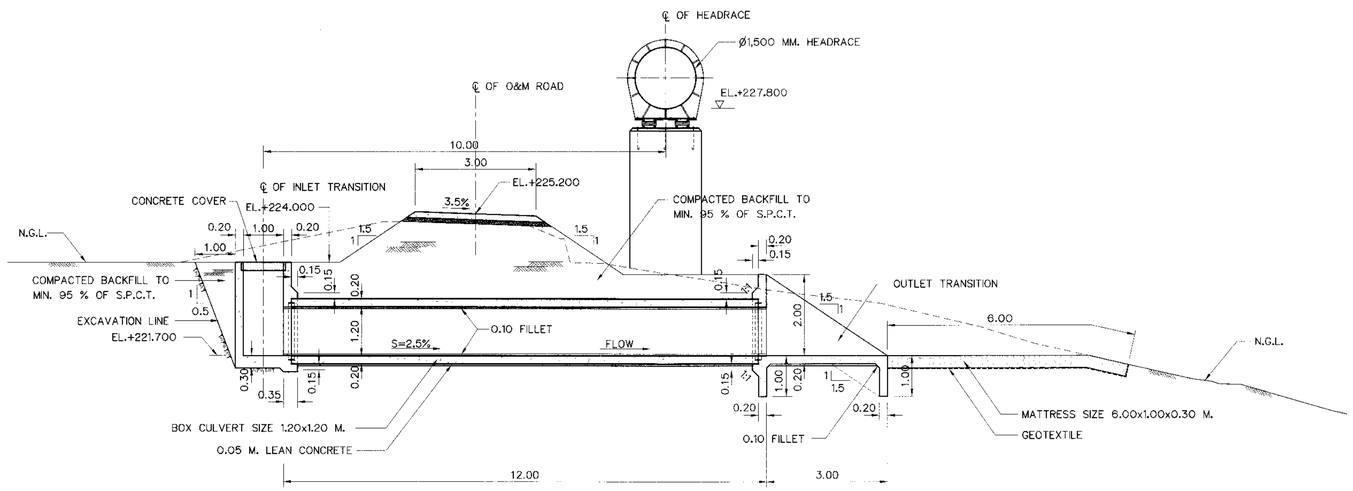

SECTION A–A

SCALE 1:75

NOTES :

1. ALL DIMENSIONS AND ELEVATIONS (M.S.L.) ARE IN METERS. UNLESS OTHERWISE SHOWN.
2. SYMBOLS, ABBREVIATIONS AND GENERAL NOTES SEE DWG. NO. KLP-GN-03
3. THE ALIGNMENT OF THE HEADRACE AND RELATED STRUCTURES SHALL BE CHECK AND CORRECTED BY THE CONTRACTOR TO SUIT THE FIELD CONDITIONS AND SHALL BE SUBMITTED TO DEDE'S FIELD ENGINEER FOR APPROVAL

REFERENCE DRAWINGS :

1. HEADRACE PLAN AND PROFILE, STA. 1+000 TO STA. 1+459.506	KLP-HR-05
2. HEADRACE DRAIN CULVERT DETAILS OF REINFORCEMENT	KLP-HR-21
3. HEADRACE TYPICAL SECTIONS AND DETAIL	KLP-HR-06

0 1 2 3 4 5 6

SCALE 1:75 METERS

NO.	DATE	REVISIONS	CHECKED	APPROVED
3				
2				
1				

CONSULTANTS DEDE

KINGDOM OF THAILAND
Department of Alternative Energy Development and Efficiency
MINISTRY OF ENERGY

KLONG LAM PLOK HYDROPOWER PROJECT

CIVIL WORKS AND TRANSMISSION LINE
HEADRACE
DRAIN CULVERT STA. 1+381.985 , PLAN AND SECTION

P&C MANAGEMENT CO.,LTD.

Department of Alternative Energy Development and Efficiency
MINISTRY OF ENERGY

DESIGNED	สิธิ.29074	สิธิ.6228	SUBMITTED
DRAWN			RECOMMENDED
CHECKED	สิธิ.6226		APPROVED
PROJECT MANAGER		08/03/2559 DATE	

REVIEWED

DRAWING NO. KLP-HR-20

SHEET NO. 43 OF 110

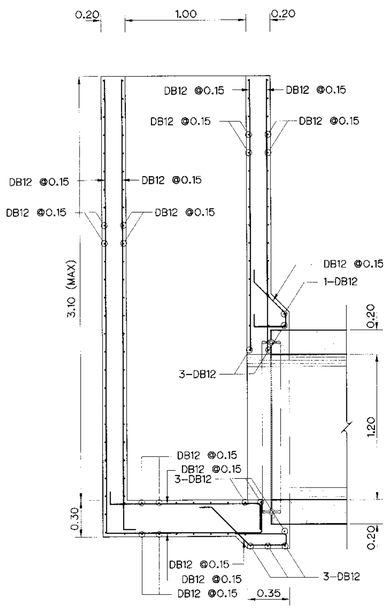

INLET DETAILS

SCALE 1:25

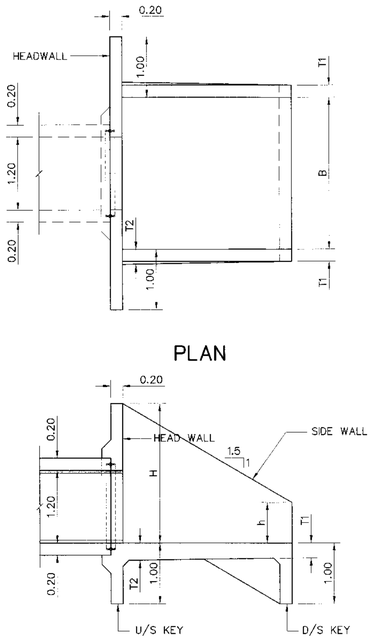

PLAN

SECTION

TYPE 1 OUTLET

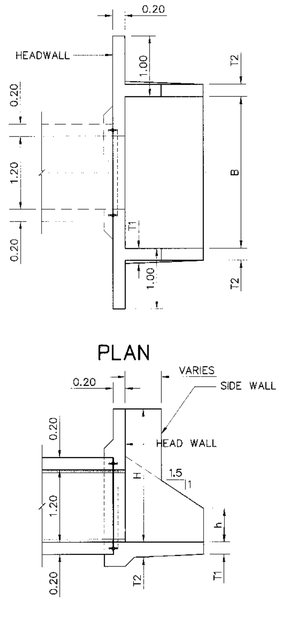

PLAN

SECTION

TYPE 2 OUTLET

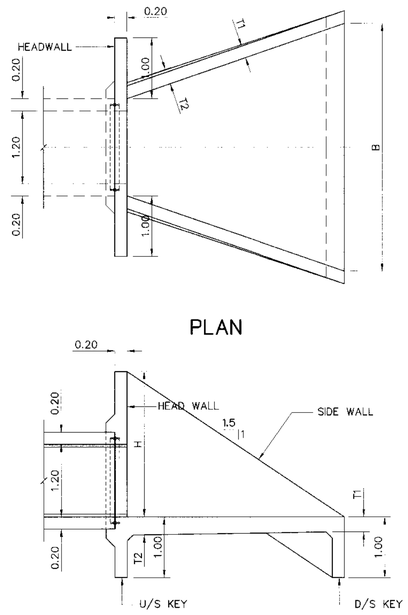

PLAN

SECTION

TYPE 3 OUTLET

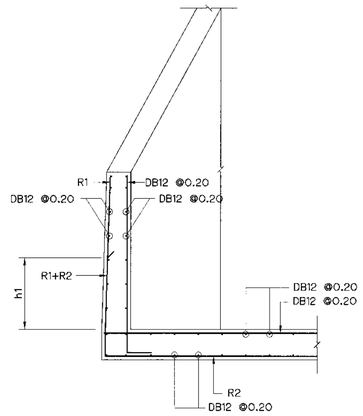

REINFORCEMENT OF SIDEWALL

SCALE 1:25

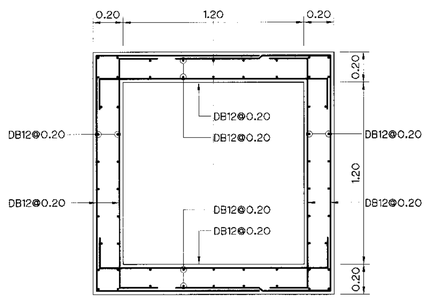

REINFORCEMENT OF BOX CULVERT

SCALE 1:25

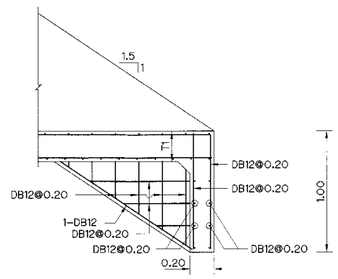

REINFORCEMENT OF D/S KEY

SCALE 1:25

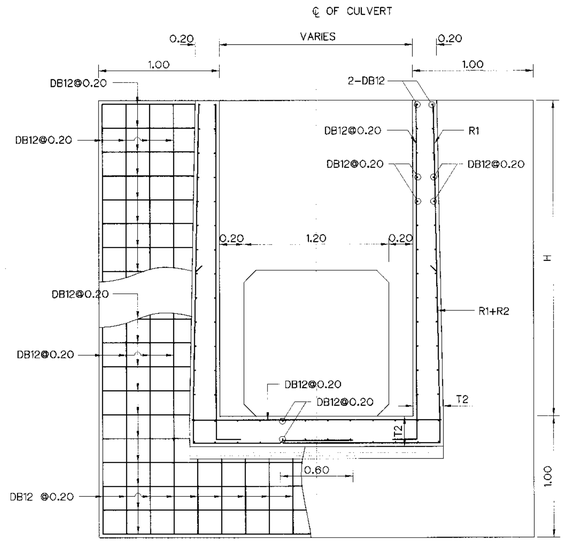

REINFORCEMENT OF HEADWALL

SCALE 1:25

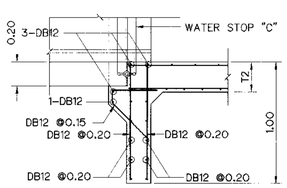

REINFORCEMENT OF U/S KEY

SCALE 1:25

TABLE OF DIMENSIONS AND REINFORCEMENT

H/h (m.)	h1 (m.)	T1/T2 (m.)	R①	R②
<=1.70	-	0.20	DB12@0.20	-
<=2.00	-	0.25	DB12@0.20	-
<=2.50	0.50	0.25	DB12@0.20	DB12@0.20
<=3.00	1.50	0.30	DB12@0.20	DB16@0.20
<=3.50	1.50	0.35	DB16@0.20	DB16@0.20

NOTES :

1. ALL DIMENSIONS AND ELEVATIONS (M.S.L.) ARE IN METERS, UNLESS OTHERWISE SHOWN.
2. SYMBOLS, ABBREVIATIONS AND GENERAL NOTES SEE DWG. NO. KLP-GN-03
3. CONCRETE DESIGN BASED ON THE COMPRESSIVE STRENGTH OF 210 KSC, STANDARD CYLINDER Ø0.15x0.30 m. TEST AT AGE 28 DAYS. UNLESS OTHERWISE INDICATED IN SPECIFIC DRAWINGS.

NO.	DATE	REVISIONS	CHECKED	APPROVED
3				
2				
1				

CONSULTANTS | DEDE

KINGDOM OF THAILAND
Department of Alternative Energy Development and Efficiency
MINISTRY OF ENERGY

KLONG LAM PLOK HYDROPOWER PROJECT

CIVIL WORKS AND TRANSMISSION LINE
HEADRACE
DRAIN CULVERT DETAILS OF REINFORCEMENT SHEETS 1 OF 2

P&C MANAGEMENT CO.,LTD.

DESIGNED 28.29074 28.6228
DRAWN
CHECKED 28.6228
PROJECT MANAGER 08/03/2559 DATE

Department of Alternative Energy Development and Efficiency
MINISTRY OF ENERGY
REVIEWED
SUBMITTED
RECOMMENDED
APPROVED P. Hoonsil

DRAWING NO. KLP-HR-21
SHEET NO. 44 OF 110

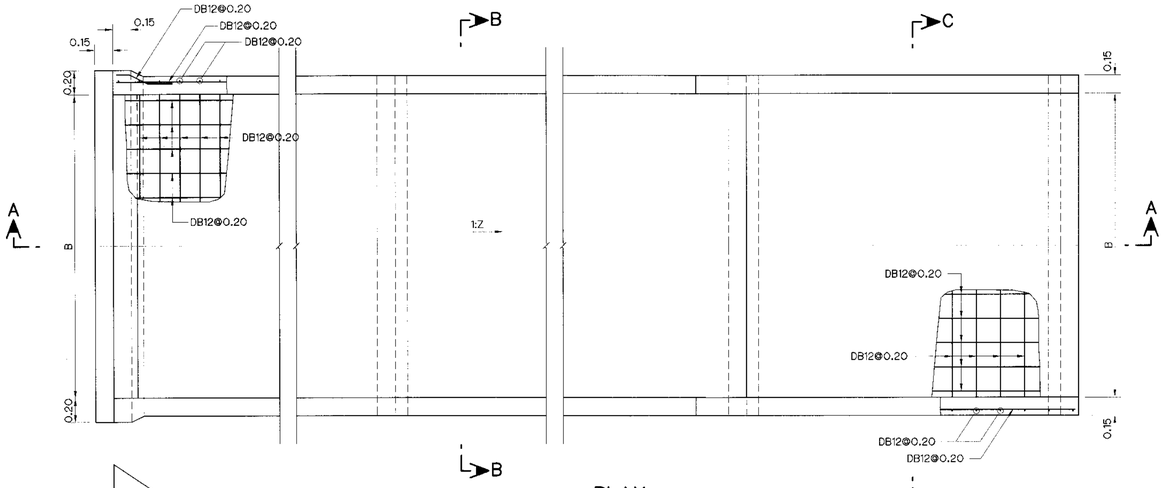

PLAN

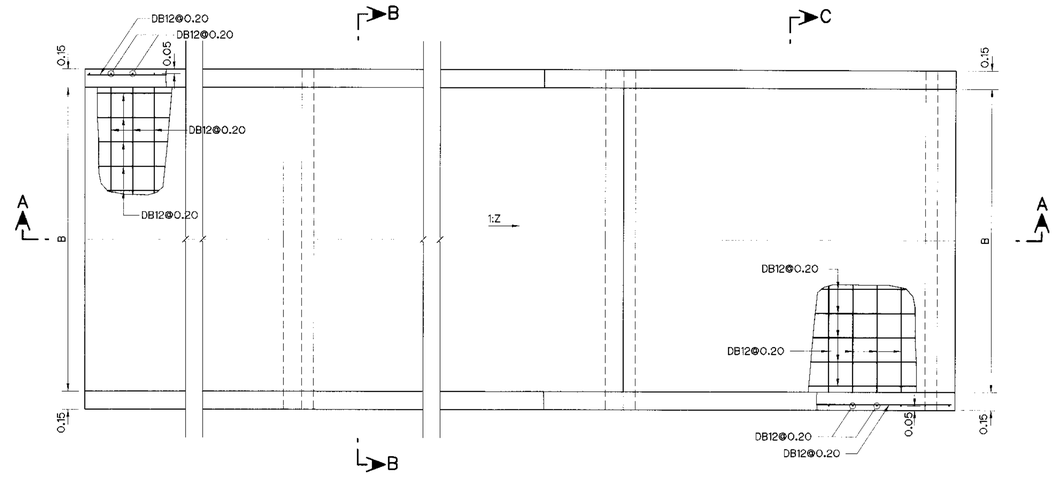

PLAN

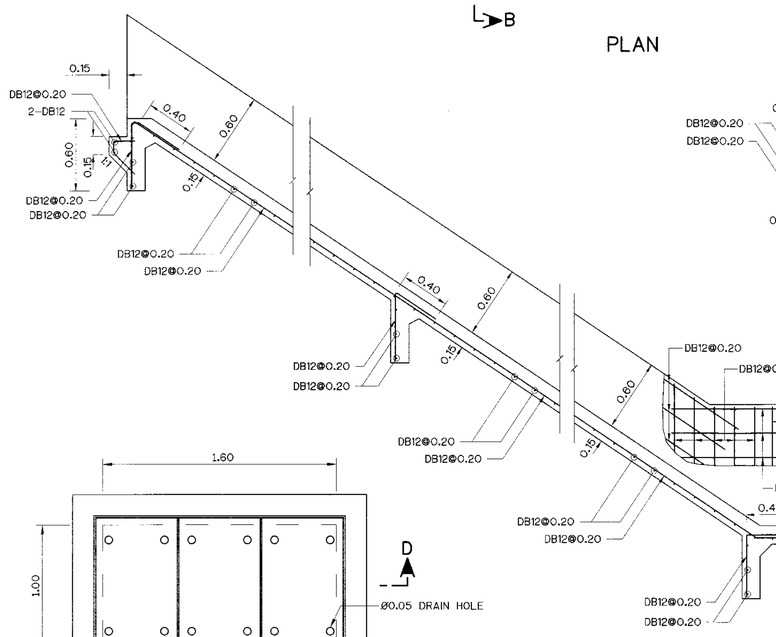

SECTION A–A

TYPE 1 CHUTE

SCALE 1:25

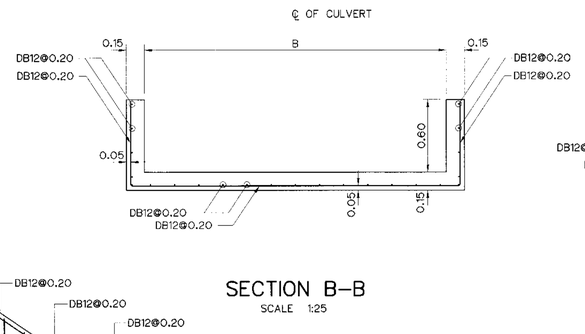

SECTION B–B

SCALE 1:25

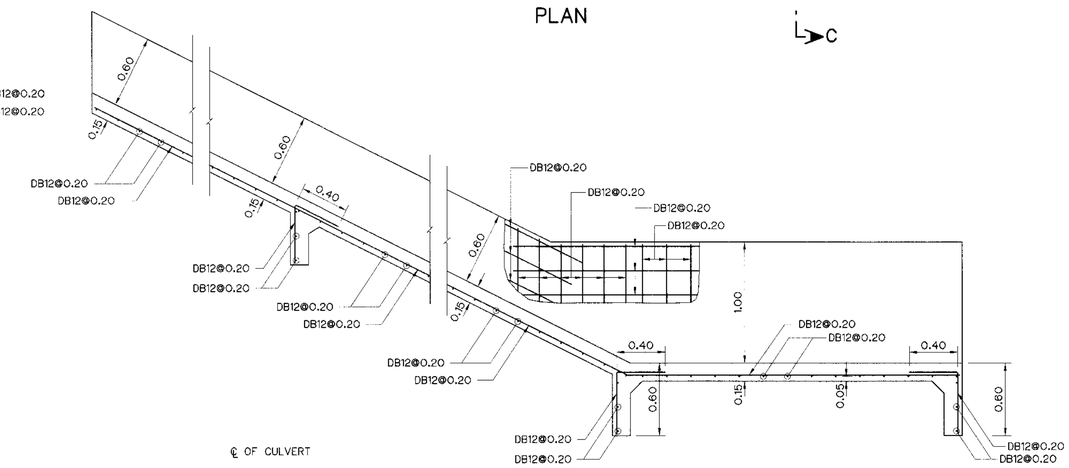

SECTION

TYPE 2 CHUTE

SCALE 1:25

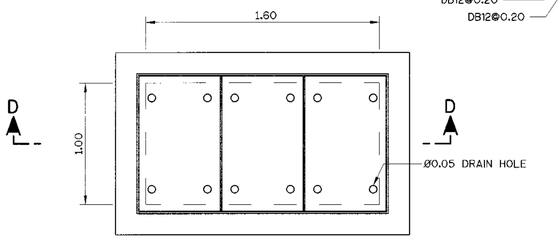

CONCRETE COVER

NOT TO SCALE

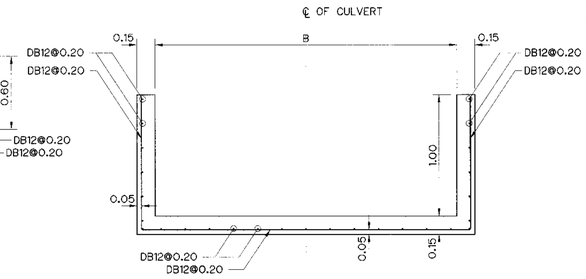

SECTION C–C

SCALE 1:25

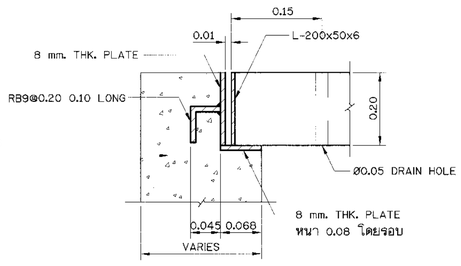

DETAIL "1"

NOT TO SCALE

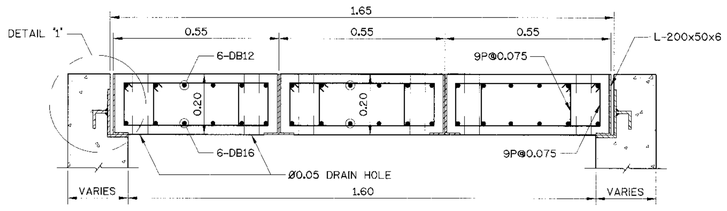

SECTION D–D

NOT TO SCALE

0 0.5 1.0 1.5 2.0

SCALE 1:25 METERS

NOTES :

1. ALL DIMENSIONS AND ELEVATIONS (M.S.L.) ARE IN METERS, UNLESS OTHERWISE SHOWN.
2. SYMBOLS, ABBREVIATIONS AND GENERAL NOTES SEE DWG. NO. KLP–GN–03
3. CONCRETE DESIGN BASED ON THE COMPRESSIVE STRENGTH OF 210 KSC, STANDARD CYLINDER Ø0.15x0.30 m. TEST AT AGE 28 DAYS. UNLESS OTHERWISE INDICATED IN SPECIFIC DRAWINGS.

NO.	DATE	REVISIONS	CHECKED	APPROVED
3				
2				
1				

CONSULTANTS — DEDE

KINGDOM OF THAILAND
Department of Alternative Energy Development and Efficiency
MINISTRY OF ENERGY

KLONG LAM PLOK HYDROPOWER PROJECT

CIVIL WORKS AND TRANSMISSION LINE

HEADRACE

DRAIN CULVERT DETAILS OF REINFORCEMENT SHEETS 2 OF 2

P&C MANAGEMENT CO.,LTD.

Department of Alternative Energy Development and Efficiency
MINISTRY OF ENERGY

DESIGNED	ณัฏฐพงศ์	28.6.2016	SUBMITTED
DRAWN			RECOMMENDED
CHECKED		28.6.2016	APPROVED
PROJECT MANAGER		08/03/2559 DATE	

REVIEWED

DRAWING NO. KLP–HR–22

SHEET NO. 45 OF 110

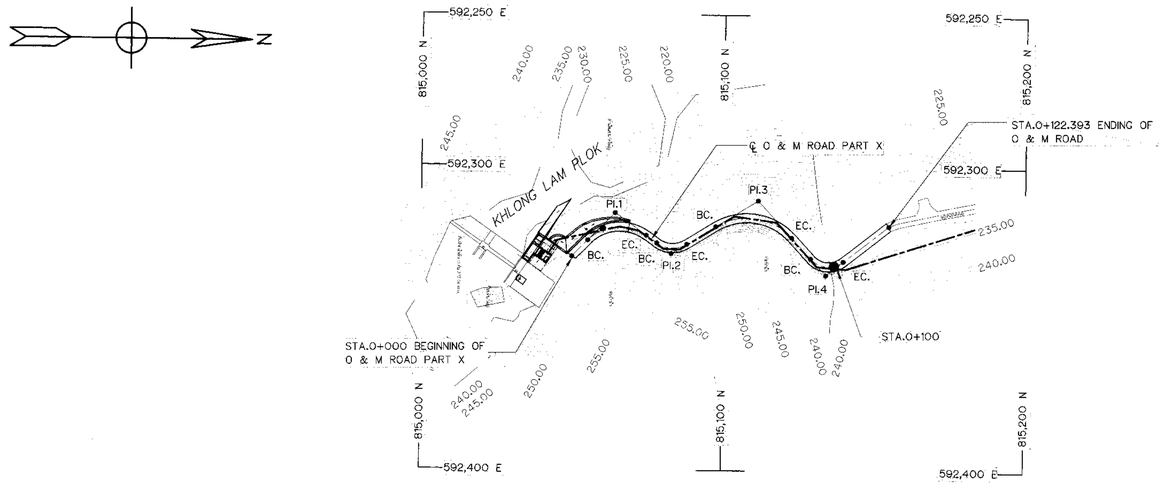

PLAN

SCALE 1:1,000

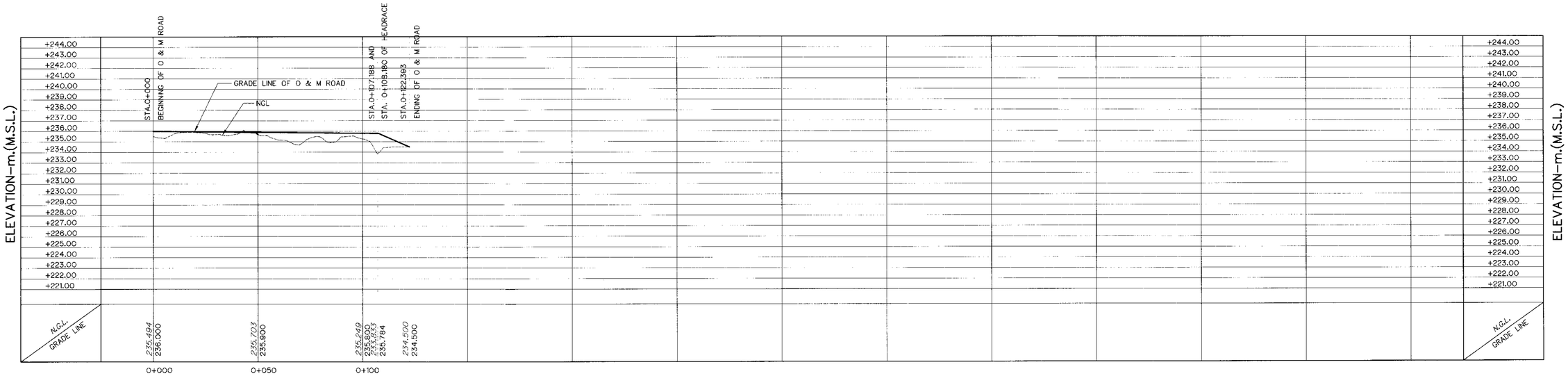

PROFILE

VERTICAL SCALE 1:200

HORIZONTAL SCALE 1:1,000

HORIZONTAL CURVE OF O&M ROAD

NO. PI.	COORDINATE N	COORDINATE E	PI. – PI. (m)	DEFLECTION ANGLE (△) (° – ' – ")	TL. (m)	R (m)	LC. (m)	BC. STA. (km)	PI. STA. (km)	EC. STA. (km)	BEARING (N/S ° – ' – " E/W)
BEG.	815,049.995	592,329.732	–	–	–	–	–	–	0+000.000	–	–
1	815,064.253	592,315.360	20.245	80°–39'–05.69"	12.733	15.000	21.115	0+007.512	0+020.245	0+028.627	N45°–13'–41.31"W
2	815,082.925	592,328.641	22.914	67°–02'–14.68"	5.961	9.000	10.530	0+032.846	0+038.808	0+043.377	N35°–25'–24.39"E
3	815,111.586	592,310.999	33.656	78°–46'–17.64"	16.420	20.000	27.496	0+054.651	0+071.071	0+082.148	N31°–36'–50.30"W
4	815,134.102	592,335.278	33.113	85°–10'–47.77"	7.354	8.000	11.893	0+091.486	0+098.840	0+103.380	N47°–09'–27.35"E
END	815,154.906	592,319.080	33.553	–	–	–	–	–	0+122.393	–	N38°–01'–20.42"W

NOTES :

1. ALL DIMENSIONS AND ELEVATIONS (M.S.L.) ARE IN METERS UNLESS OTHERWISE SHOWN.
2. SYMBOL, ABBREVIATIONS AND GENERAL NOTES SEE DWG. NO. KLP–GN–03
3. THE ALIGNMENT OF THE HEADRACE AND RELATED STRUCTURES SHALL BE CHECKED AND CORRECTED BY THE CONTRACTOR TO SUIT THE FIELD CONDITIONS AND SHALL BE SUBMITTED TO DEDE'S FIELD ENGINEER FOR APPROVAL

REFERENCE DRAWINGS :

1. O&M ROAD TYPICAL SECTIONS AND DETAILS KLP–OM–02

0 5 10 15
SCALE 1:200 METERS

0 10 20 40 50 80
SCALE 1:1,000 METERS

NO.	DATE	REVISIONS	CHECKED	APPROVED
3				
2				
1				

CONSULTANTS | DEDE

KINGDOM OF THAILAND
Department of Alternative Energy Development and Efficiency
MINISTRY OF ENERGY

KLONG LAM PLOK HYDROPOWER PROJECT

CIVIL WORKS AND TRANSMISSION LINE
O&M ROAD
PLAN AND PROFILE, STA. 0+000 TO STA. 0+107.621

P&C MANAGEMENT CO.,LTD.

Department of Alternative Energy Development and Efficiency
MINISTRY OF ENERGY

REVIEWED			
DESIGNED	28.29074	28.6226	SUBMITTED
DRAWN			RECOMMENDED
CHECKED		28.6226	APPROVED
PROJECT MANAGER		08/03/2559 DATE	DRAWING NO. KLP–OM–01

SHEET NO. 46 OF 110

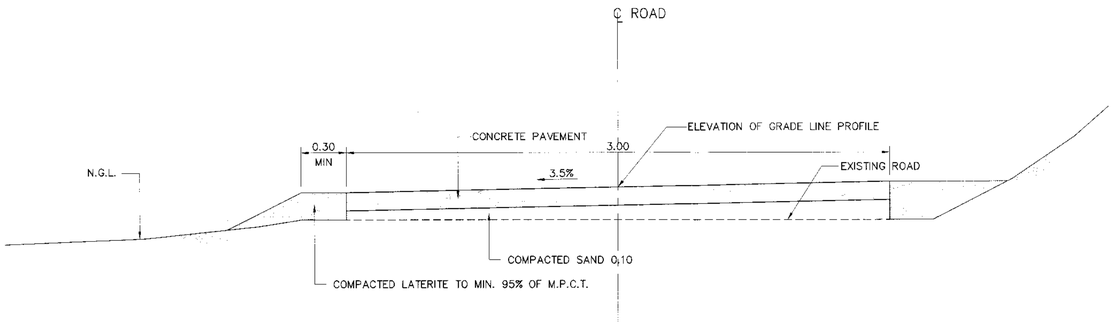

TYPICAL SECTION OF O&M ROAD

NOT TO SCALE

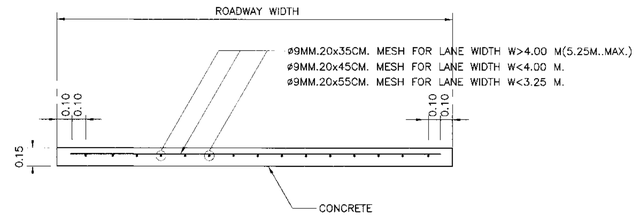

REINFORCEMENT DETAIL OF CONCRETE PAVEMENT CROSS-SECTION

NOT TO SCALE

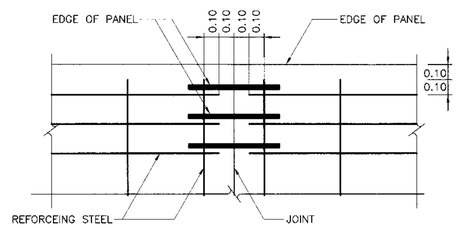

DETAIL "A"

NOT TO SCALE

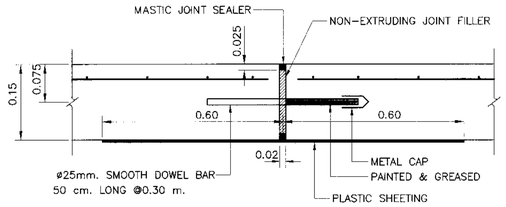

DETAIL OF EXPANSION JOINT

NOT TO SCALE

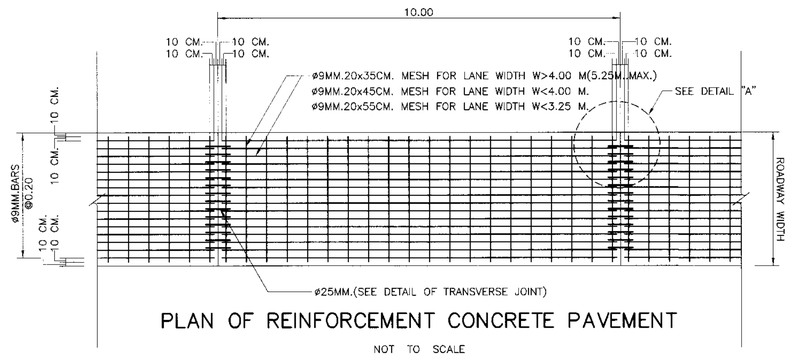

PLAN OF REINFORCEMENT CONCRETE PAVEMENT

NOT TO SCALE

NOTES 1 :

1. ALL DIMENSIONS ARE IN METERS UNLESS OTHERWISE INDICATED.
2. EXPANSION JOINT SHALL BE CONSTRUCTED AT THE INTERVAL OF 90 METERS.
3. MASTIC JOINT SEALER SHALL BE OF THE HOT POURED ELASTIC TYPE CONFORMING TO TIS.479.
4. JOINT FILLER SHALL CONFORM TO THE AASHTO M.213-74 OR ASTM.D1751-73 SPECIFICATION.
5. CONCRETE SHALL HAVE A MINIMUM ULTIMATE COMPRESSIVE STRENGTH OF 300 KSC. FOR 15x15x15 CM. CUBE AT 28 DAYS.
6. REINFORCING STEEL SHALL CONFORM TIS.20 GRADE SR 24 FOR ROUND BARS AND TIS.24 GRADE SD 30 FOR DEFORMED BAR.
7. PLASTIC SHEET USED IN CONSTRUCTION SHALL HAVE THE FOLLOWING REQUIREMENTS :
   - 7.1 THICKNESS OF 0.07 MM. WITH A TOLERANCE OF NOT MORE THAN 7 % SHALL BE REQUIRED.
   - 7.2 WIDTH SHALL NOT BE LESS THAN 1.20 M.
   - 7.3 IT SHALL BE COLOURLESS,TRANSPARENT AND WATERPROOF, FREE FROM POROUS AREA, TURN AREA AND BLISTERING AREA WHICH ARE VISIBLE BY NAKED EYE. EDGE SHALL BE STRAIGHT.
   - 7.4 CONTINUOUS LENGTH SHALL BE REQUIREMENT TO THE WIDTH OF TRAFFIC LANES. CONNECTION ALLOWED AT LONGITUDINAL JOINTS WITH NOT LESS. THAN 20 CM. OVERLAPPING SHALL BE REQUIRED.

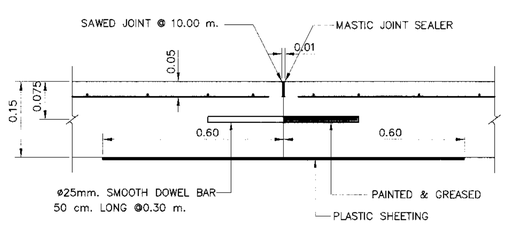

DETAIL OF CONSTRUCTION JOINT

NOT TO SCALE

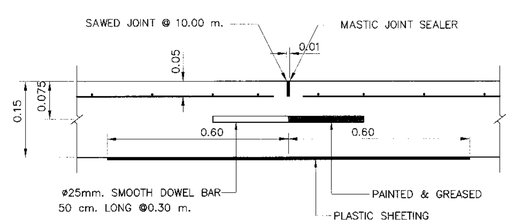

DETAIL OF CONTRACTION JOINT

NOT TO SCALE

REFERENCE DRAWINGS :

1. O&M ROAD PLAN AND PROFILE, KLP-OM-01

NO.	DATE	REVISIONS	CHECKED	APPROVED
3				
2				
1				
	CONSULTANTS		DEDE	

KINGDOM OF THAILAND
Department of Alternative Energy Development and Efficiency
MINISTRY OF ENERGY

KLONG LAM PLOK HYDROPOWER PROJECT

CIVIL WORKS AND TRANSMISSION LINE
O&M ROAD
TYPICAL SECTION AND DETAILS

P&C MANAGEMENT CO.,LTD.

DESIGNED 28.29074 28.6226
DRAWN
CHECKED 28.6226
PROJECT MANAGER 08/03/2559 DATE

Department of Alternative Energy Development and Efficiency
MINISTRY OF ENERGY
REVIEWED
SUBMITTED
RECOMMENDED
APPROVED

DRAWING NO. KLP-OM-02
SHEET NO. 47 OF 110

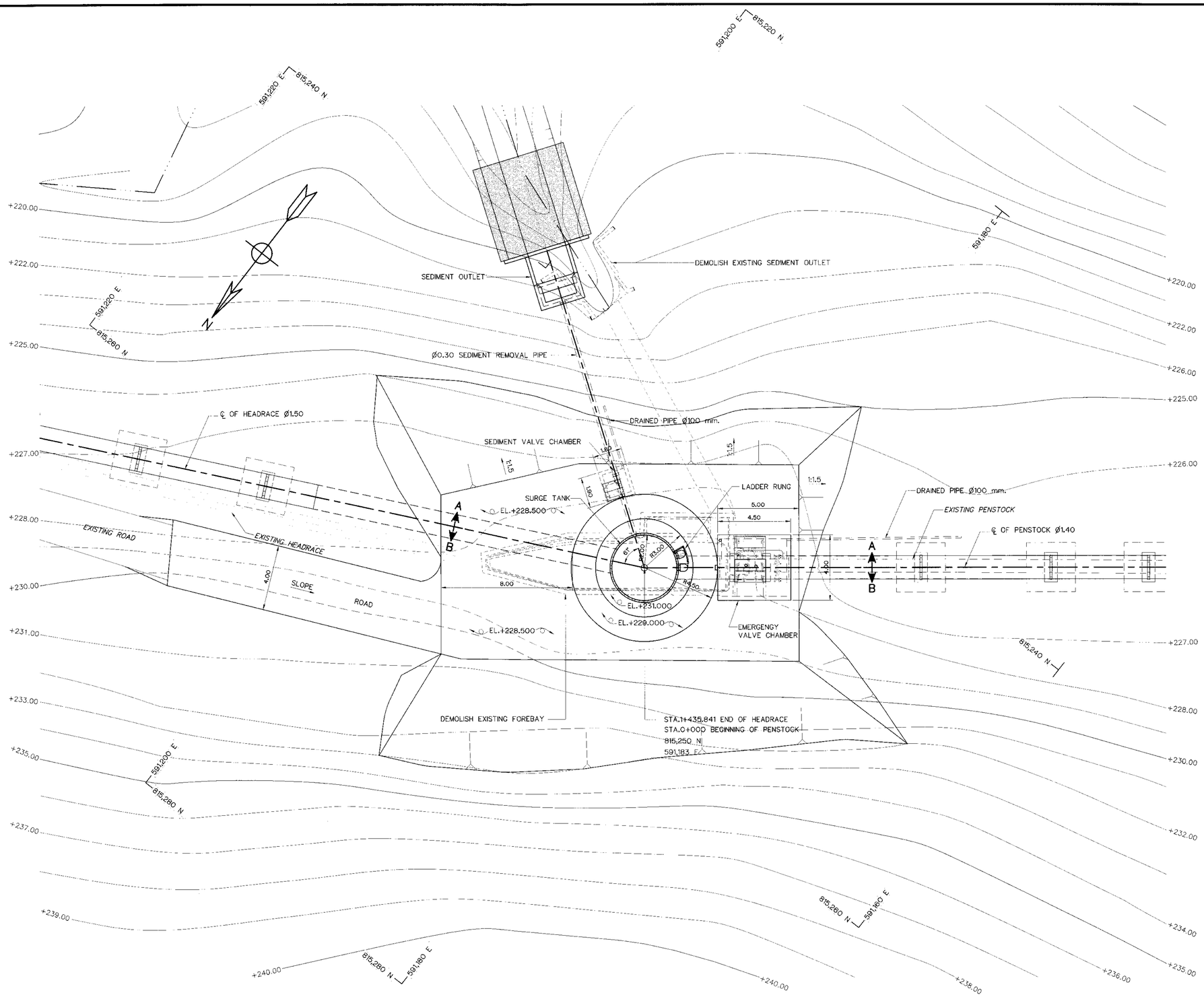

GENERAL LAY-OUT

SCALE 1:125

NOTES :

1. ALL DIMENSIONS AND ELEVATIONS ARE IN METERS, UNLESS OTHERWIRE SHOWN.
2. STEEL PIPE SHELL CONFORM TO JIS G 3101 SS34
3. BASE OF CONCRETE FOUNDATION SHALL BE DETERMINED IN FIELD BY EMBEDING TO STABLE ROCK FOUNDATION WITH A ALLOWABLE BEARING CAPACITY NOT LESS THAN 20 T/m^2
4. CORROSION PROTECTION OF STEEL PIPE OR GUARDRAIL IS WARNED TO STRICTLY FOLLOW GALVANIZE SPECIFICATION
5. STEEL TANK , GIRDER AND STIFFENER SHALL CONFORM TO JIS G 3101 SS34

REFERENCE DRAWING :

1. SURGE TANK SECTIONS	KLP-ST-02
2. EMERGENCY VALVE CHAMBER PLAN SECTIONS AND DETAILS	KLP-ST-07
3. SEDIMENT VALVE CHAMBER PLAN SECTIONS AND DETAILS	KLP-ST-09
4. SEDIMENT OUTLET PLAN SECTION AND DETAILS	KLP-ST-11

0 1 2 4 6 8 10

SCALE 1:125 METERS

KINGDOM OF THAILAND
Department of Alternative Energy Development and Efficiency
MINISTRY OF ENERGY

KLONG LAM PLOK HYDROPOWER PROJECT

CIVIL WORKS AND TRANSMISSION LINE
SURGE TANK
GENERAL LAY-OUT

NO.	DATE	REVISIONS	CHECKED	APPROVED
3				
2				
1				

CONSULTANTS — DEDE

P&C MANAGEMENT CO.,LTD.

DESIGNED — RB.29074 — RB.6226
DRAWN
CHECKED — RB.6226
PROJECT MANAGER — 08/03/2559 DATE

Department of Alternative Energy Development and Efficiency
MINISTRY OF ENERGY

REVIEWED
SUBMITTED
RECOMMENDED
APPROVED

DRAWING NO. KLP-ST-01

SHEET NO. 48 OF 110

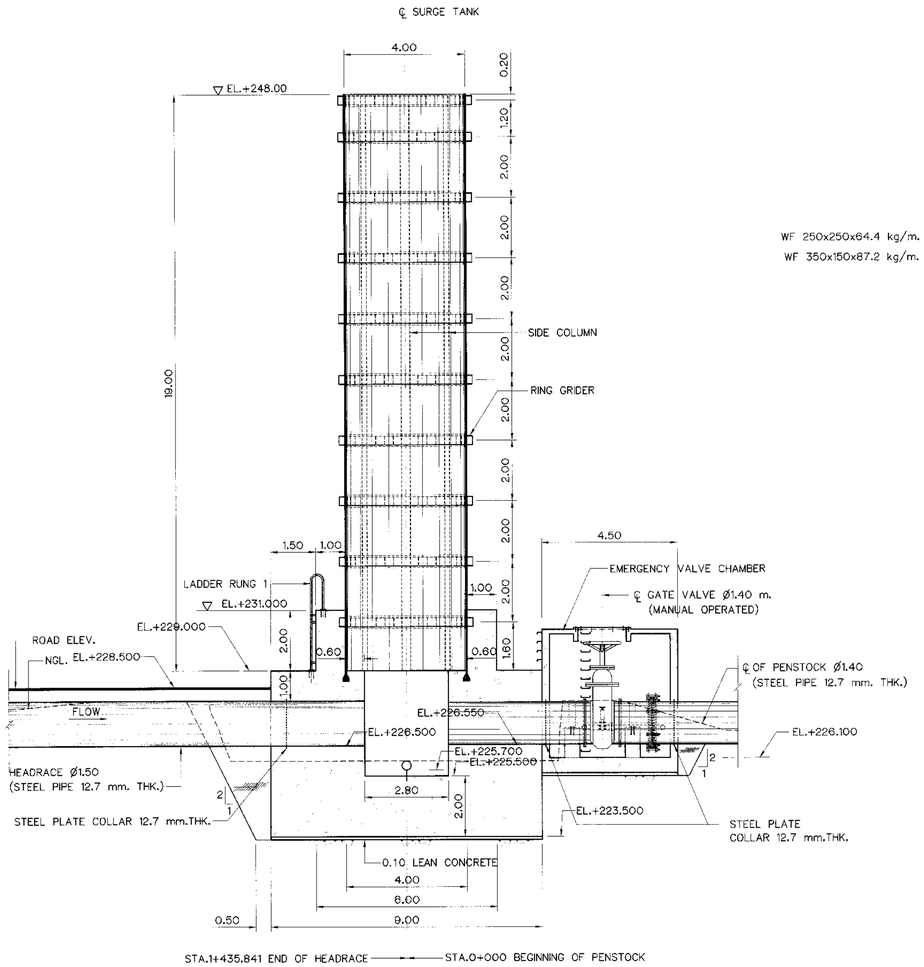

SECTION A–A
SCALE 1:100

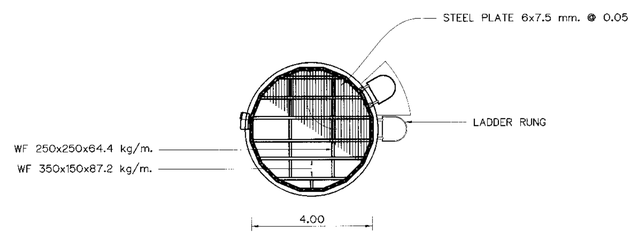

PLAN ON TOP LEVEL
SCALE 1:100

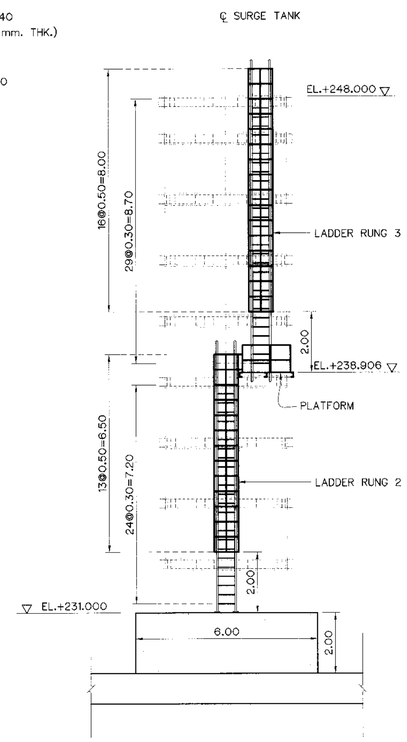

LADDER RUNG 2&3 ELEVATION
SCALE 1:100

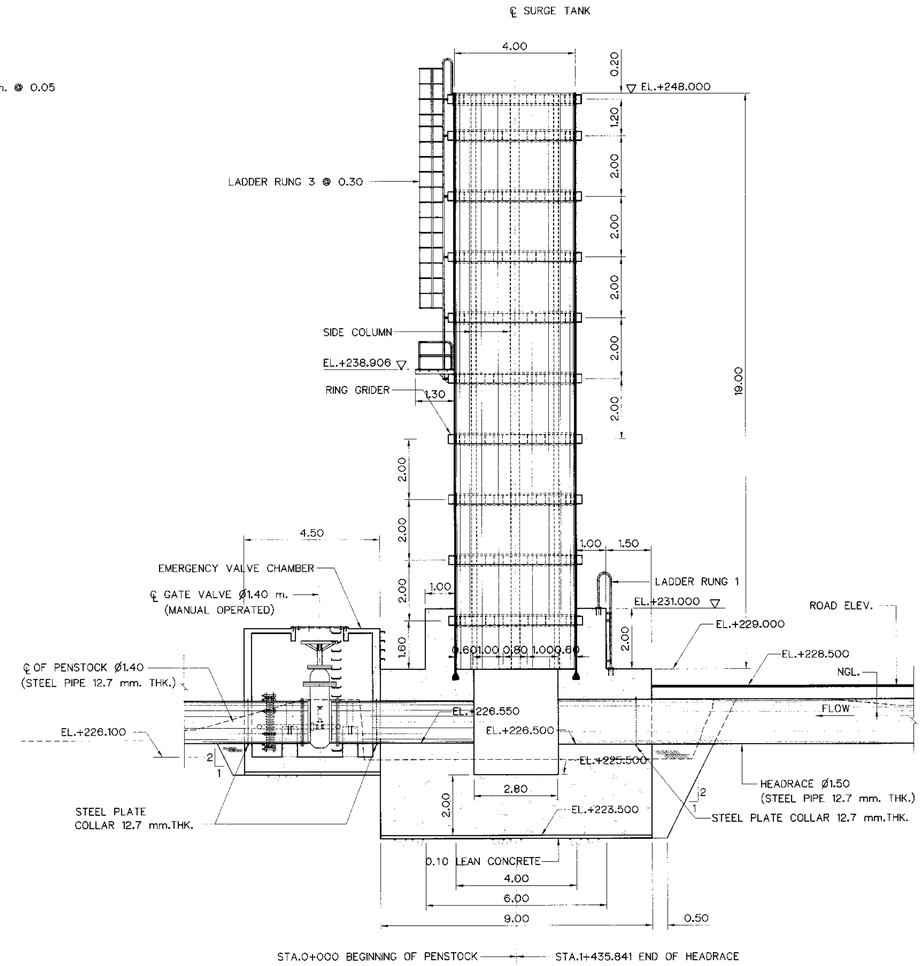

SECTION B–B
SCALE 1:100

NOTES :

1. ALL DIMENSIONS AND ELEVATIONS ARE IN METERS, UNLESS OTHERWIRE SHOWN.
2. STEEL PIPE SHELL CONFORM TO JIS G 3101 SS34
3. BASE OF CONCRETE FOUNDATION SHALL BE DETERMINED IN FIELD BY EMBEDING TO STABLE ROCK FOUNDATION WITH A ALLOWABLE BEARING CAPACITY NOT LESS THAN 20 T/m^2
4. CORROSION PROTECTION OF STEEL PIPE OR GUARDRAIL IS WARNED TO STRICTLY FOLLOW GALVANIZE SPECIFICATION
5. STEEL TANK , GIRDER AND STIFFENER SHALL CONFORM TO JIS G 3101 SS34

REFERENCE DRAWING :

1. SURGE TANK GENERAL LAY-OUT	KLP-ST-01
2. LADDER RUNG DETAILS	KLP-ST-03
3. PLATFORM DETAILS	KLP-ST-04
4. RING GRIDER AND HANDRAIL	KLP-ST-05

0 1 2 3 4 5 6 7 8
SCALE 1:100 METERS

NO.	DATE	REVISIONS	CHECKED	APPROVED
3				
2				
1				
	CONSULTANTS		DEDE	

KINGDOM OF THAILAND
Department of Alternative Energy Development and Efficiency
MINISTRY OF ENERGY

KLONG LAM PLOK HYDROPOWER PROJECT

CIVIL WORKS AND TRANSMISSION LINE
SURGE TANK
SECTIONS

P&C MANAGEMENT CO.,LTD.

Department of Alternative Energy Development and Efficiency
MINISTRY OF ENERGY

DESIGNED	ณัฐ.29074	ณัฐ.6226	REVIEWED
DRAWN			SUBMITTED
CHECKED		ณัฐ.6226	RECOMMENDED
			APPROVED
PROJECT MANAGER		08/03/2559 DATE	DRAWING NO. KLP-ST-02

SHEET NO. 49 OF 110

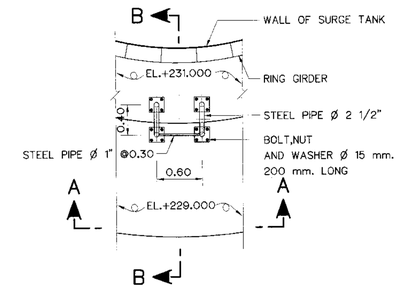

PLAN LADDER RUNG 1

SCALE 1:40

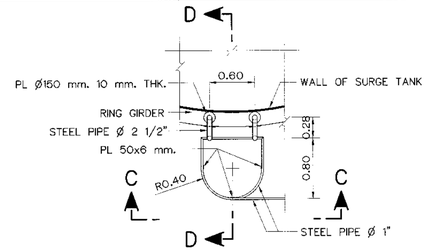

PLAN LADDER RUNG 2

SCALE 1:40

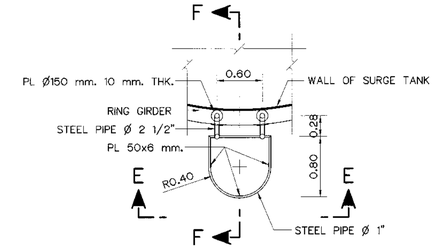

PLAN LADDER RUNG 3

SCALE 1:40

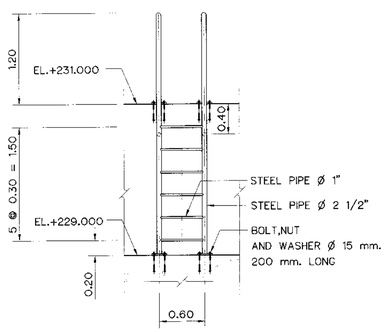

SECTION A–A

SCALE 1:40

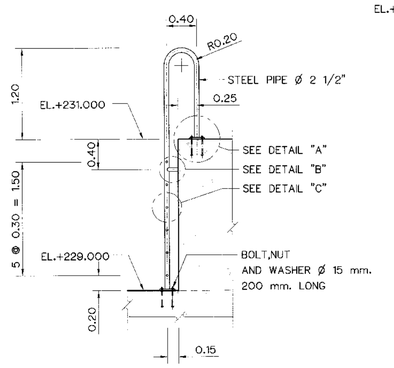

SECTION B–B

SCALE 1:40

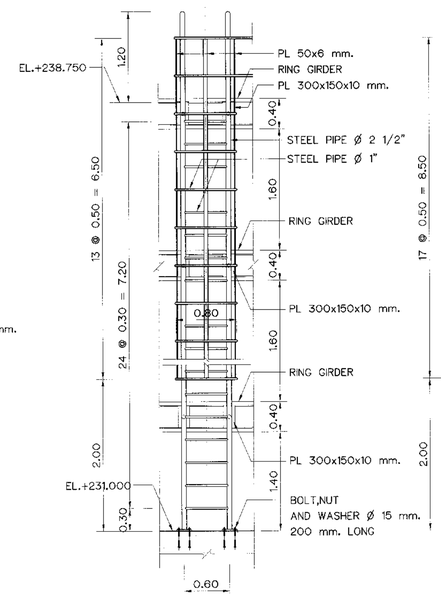

SECTION C–C

SCALE 1:40

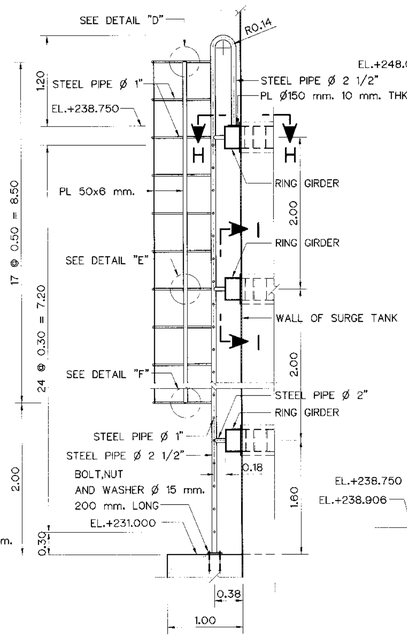

SECTION D–D

SCALE 1:40

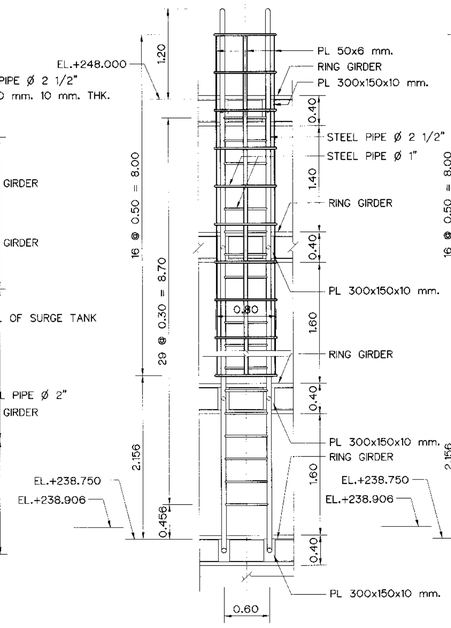

SECTION E–E

SCALE 1:40

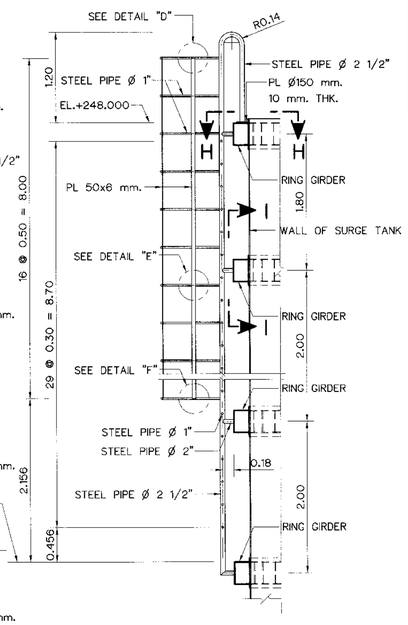

SECTION F–F

SCALE 1:40

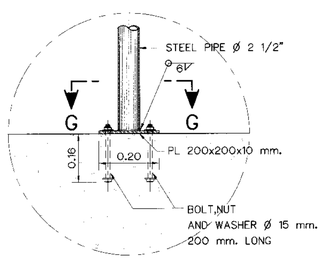

DETAIL "A"

SCALE 1:25

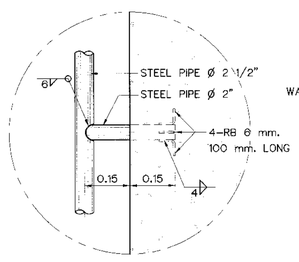

DETAIL "B"

SCALE 1:25

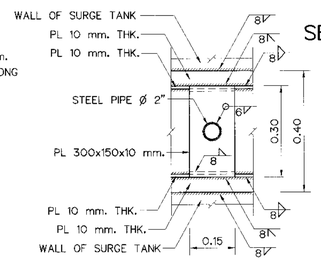

SECTION I–I

SCALE 1:25

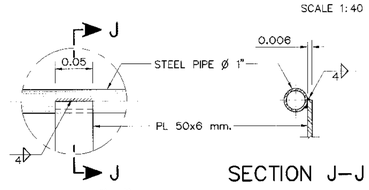

DETAIL "D"

SCALE 1:10

SECTION J–J

SCALE 1:10

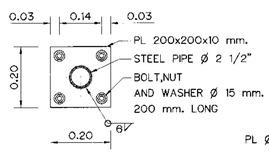

SECTION G–G

SCALE 1:25

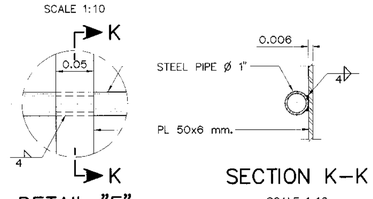

DETAIL "E"

SCALE 1:10

SECTION K–K

SCALE 1:10

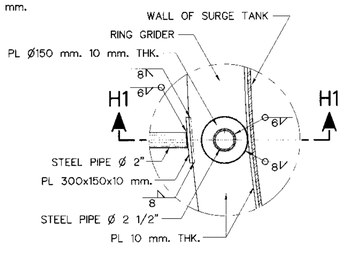

SECTION H–H

SCALE 1:25

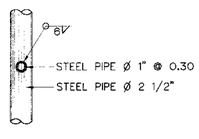

DETAIL "C"

SCALE 1:25

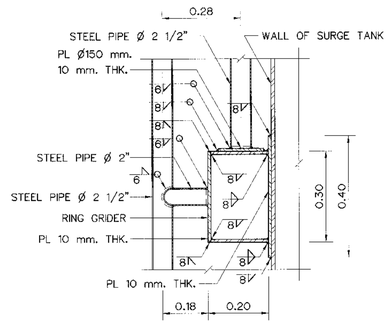

SECTION H1–H1

SCALE 1:25

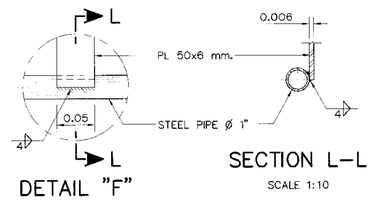

DETAIL "F"

SCALE 1:10

SECTION L–L

SCALE 1:10

NOTE :

1. ALL DIMENSIONS AND ELEVATIONS ARE IN METERS, UNLESS OTHERWISE SHOWN
2. STEEL PIPE CONFORM TO JIS G 3101 SS34
3. CORROSION PROTECTION OF STEEL PIPE OR GUARDRAIL IS WARNED TO STRICTLY FOLLOW GALVANIZE SPECIFICATION
4. STEEL TANK , GIRDER AND STIFFENEL SHALL CONFORM TO JIS G 3101 SS34

REFERENCE DRAWING :

1.	SURGE TANK GENERAL LAY-OUT	KLP-ST-01
2.	SURGE TANK SECTIONS	KLP-ST-02
3.	SURGE TANK PLATFORM DETAILS	KLP-ST-04
4.	SURGE TANK RING GRIDER AND HANDRAIL	KLP-ST-05

0 0.05 0.1 0.15 0.2 0.25 0.30 0.35
SCALE 1:10 METERS

0 0.2 0.4 0.6 0.8
SCALE 1:25 METERS

0 1 2 3
SCALE 1:40 METERS

NO.	DATE	REVISIONS	CHECKED	APPROVED
3				
2				
1				
	CONSULTANTS		DEDE	

KINGDOM OF THAILAND
Department of Alternative Energy Development and Efficiency
MINISTRY OF ENERGY

KLONG LAM PLOK HYDROPOWER PROJECT

CIVIL WORKS AND TRANSMISSION LINE
SURGE TANK
LADDER RUNG DETAILS

P&C MANAGEMENT CO.,LTD.

Department of Alternative Energy Development and Efficiency
MINISTRY OF ENERGY

DESIGNED	28.29074	28.6226	REVIEWED
DRAWN			SUBMITTED
CHECKED		28.6226	RECOMMENDED
PROJECT MANAGER	08/03/2559 DATE		APPROVED

DRAWING NO. KLP-ST-03

SHEET NO. 50 OF 110

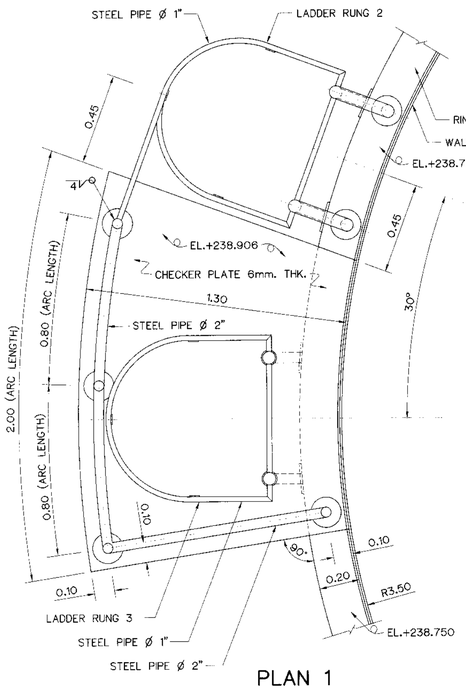

PLAN 1

SCALE 1:15

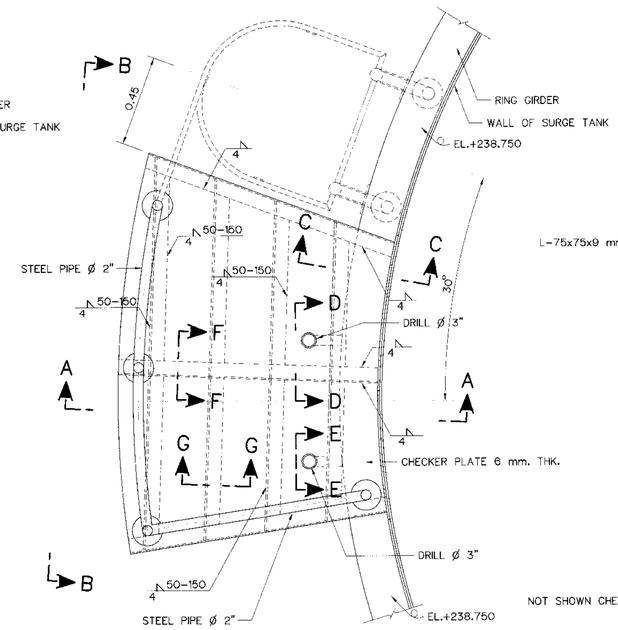

PLAN 2

SCALE 1:15

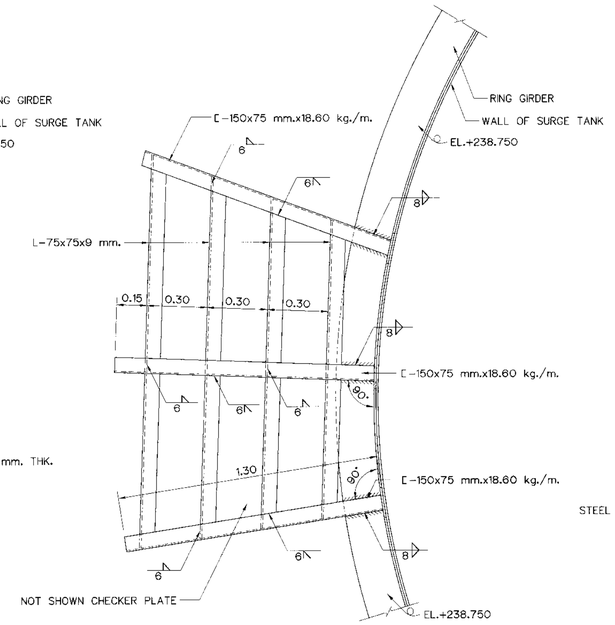

PLAN 3

SCALE 1:15

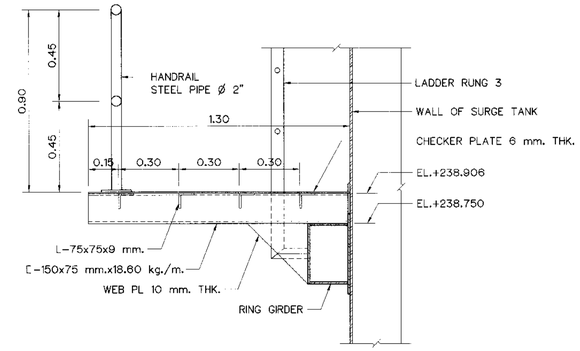

SECTION A-A

SCALE 1:15

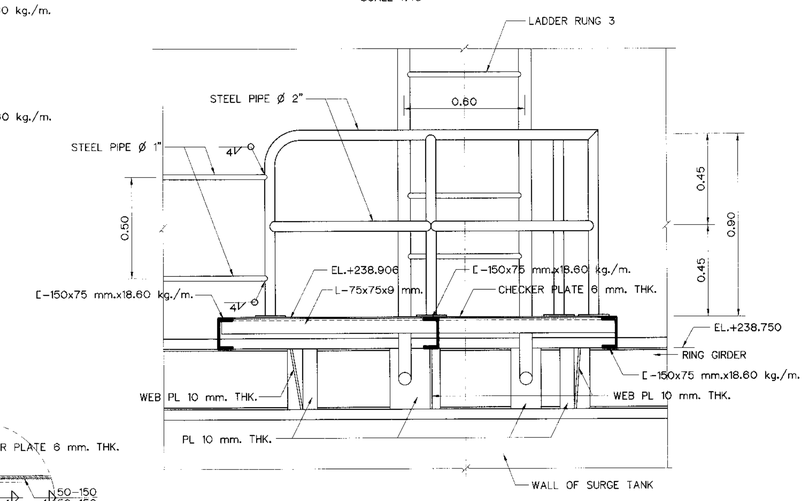

SECTION B-B

SCALE 1:15

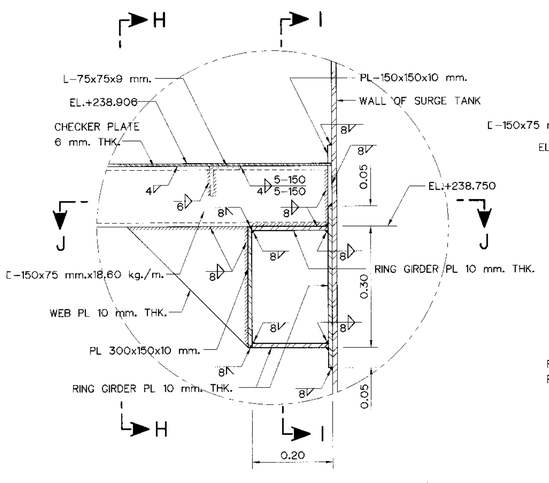

SECTION C-C

SCALE 1:7.5

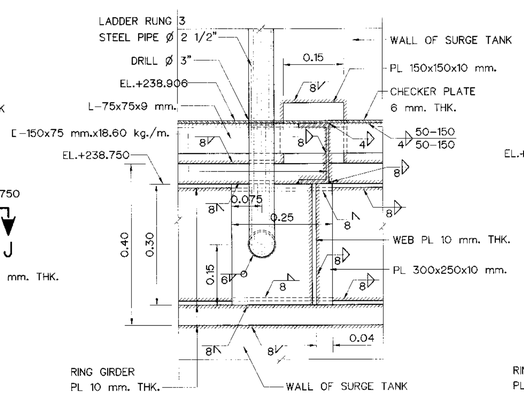

SECTION D-D

SCALE 1:7.5

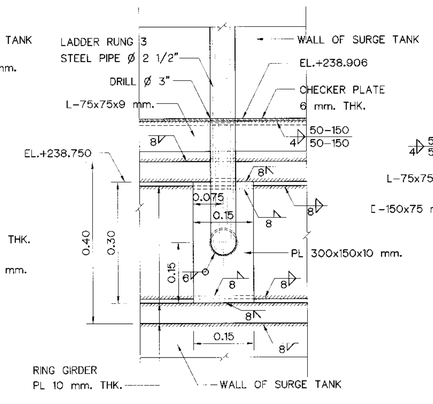

SECTION E-E

SCALE 1:7.5

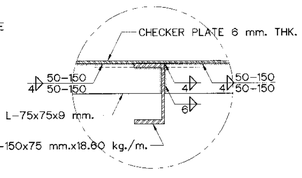

SECTION F-F

SCALE 1:7.5

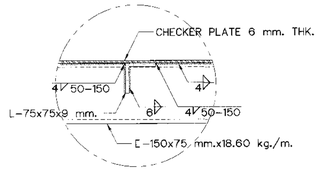

SECTION G-G

SCALE 1:7.5

NOTE :

1. ALL DIMENSIONS AND ELEVATIONS ARE IN METERS, UNLESS OTHERWISE SHOWN
2. STEEL PIPE CONFORM TO JIS G 3101 SS34
3. CORROSION PROTECTION OF STEEL PIPE OR GUARDRAIL IS WARNED TO STRICTLY FOLLOW GALVANIZE SPECIFICATION
4. STEEL TANK , GIRDER AND STIFFENEL SHALL CONFORM TO JIS G 3101 SS34

REFERENCE DRAWING :

1.	SURGE TANK GENERAL LAY-OUT	KLP-ST-01
2.	SURGE TANK SECTIONS	KLP-ST-02
3.	SURGE TANK LADDER RUNG DETAILS	KLP-ST-03
4	SURGE TANK RING GRIDER AND HANDRAIL	KLP-ST-05

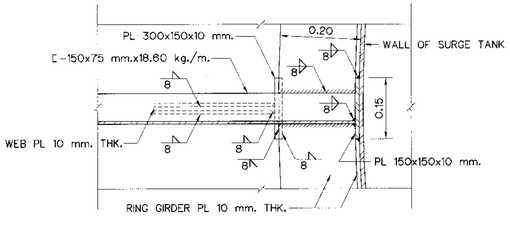

SECTION J-J

SCALE 1:7.5

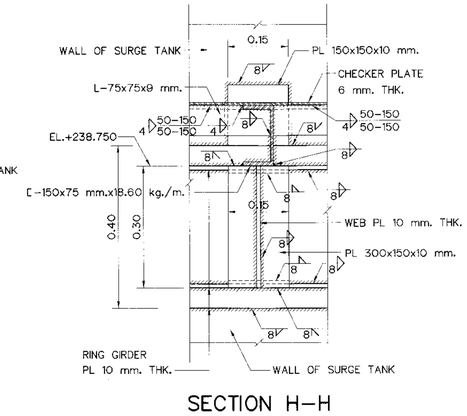

SECTION H-H

SCALE 1:7.5

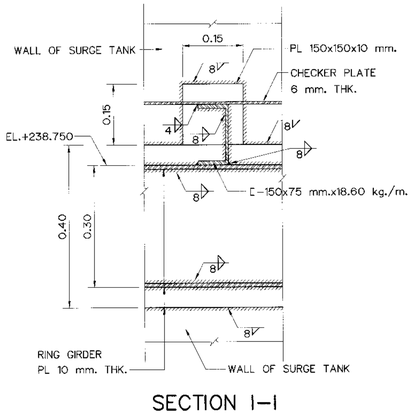

SECTION I-I

SCALE 1:7.5

0 0.075 0.15 0.30 0.45 0.60

SCALE 1:7.5 METERS

0 0.15 0.3 0.6 0.9 1.2

SCALE 1:15 METERS

NO.	DATE	REVISIONS	CHECKED	APPROVED
3				
2				
1				

CONSULTANTS | DEDE

KINGDOM OF THAILAND
Department of Alternative Energy Development and Efficiency
MINISTRY OF ENERGY

KLONG LAM PLOK HYDROPOWER PROJECT

CIVIL WORKS AND TRANSMISSION LINE
SURGE TANK
PLATFORM DETAILS

P&C MANAGEMENT CO.,LTD.

Department of Alternative Energy Development and Efficiency
MINISTRY OF ENERGY

REVIEWED

DESIGNED 28.29074 28.6226 SUBMITTED

DRAWN RECOMMENDED

CHECKED 28.6226 APPROVED

PROJECT MANAGER 08/03/2559 DATE

DRAWING NO. KLP-ST-04

SHEET NO. 51 OF 110

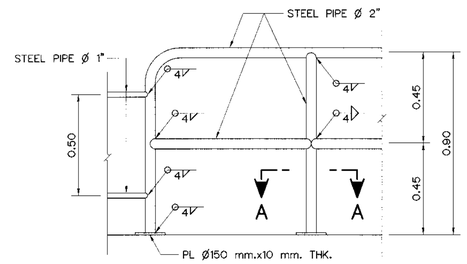

DETAIL OF HANDRAIL

SCALE 1:15

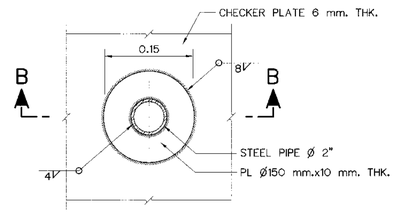

SECTION A–A

SCALE 1:5

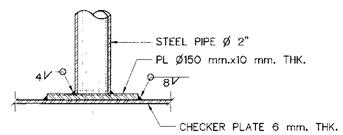

SECTION B–B

SCALE 1:5

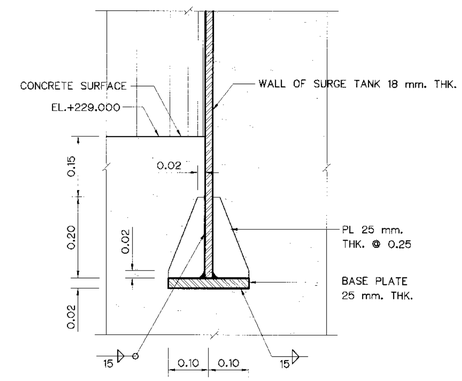

DETAIL "A"

SCALE 1:10

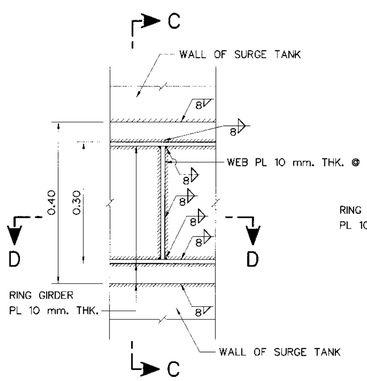

SIDE VIEW OF RING GIRDER

SCALE 1:7.5

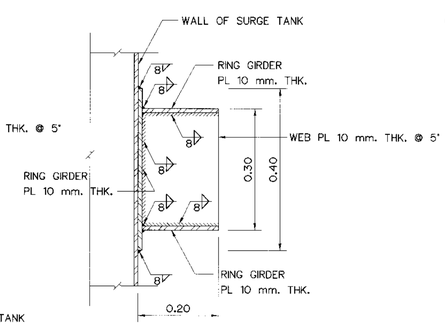

SECTION C–C

SCALE 1:7.5

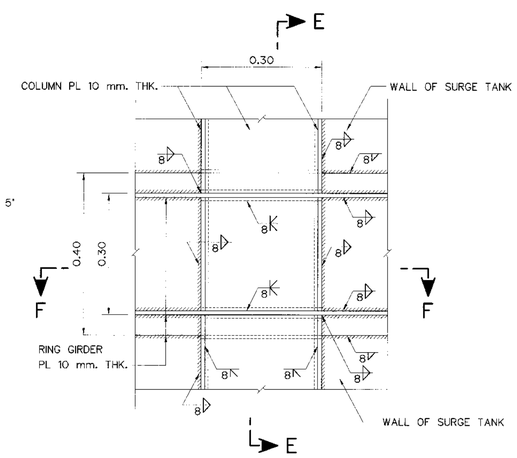

SIDE VIEW OF COLUMN
AND RING GIRDER

SCALE 1:7.5

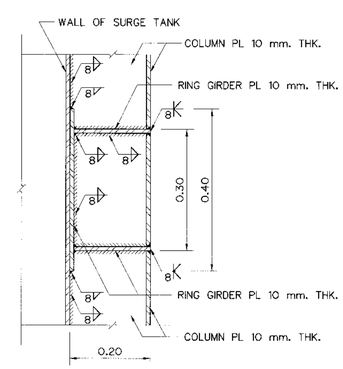

SECTION E–E

SCALE 1:7.5

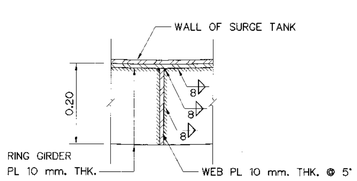

SECTION D–D

SCALE 1:7.5

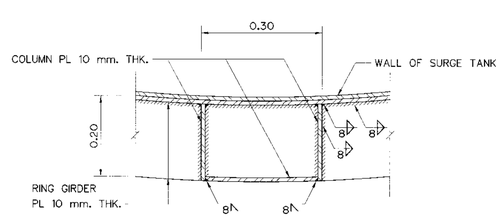

SECTION F–F

SCALE 1:7.5

RING GRIDER DETAILS

NOTE :

1. ALL DIMENSIONS AND ELEVATIONS ARE IN METERS, UNLESS OTHERWISE SHOWN
2. STEEL PIPE CONFORM TO JIS G 3101 SS34
3. CORROSION PROTECTION OF STEEL PIPE OR GUARDRAIL IS WARNED TO STRICTLY FOLLOW GALVANIZE SPECIFICATION
4. STEEL TANK , GIRDER AND STIFFENEL SHALL CONFORM TO JIS G 3101 SS34

REFERENCE DRAWING :

1. SURGE TANK GENERAL LAY–OUT KLP–ST–01
2. SURGE TANK SECTIONS KLP–ST–02

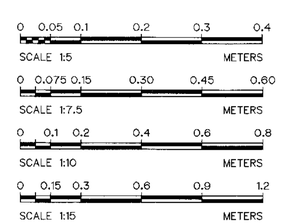

NO.	DATE	REVISIONS	CHECKED	APPROVED
3				
2				
1				
	CONSULTANTS		DEDE	

KINGDOM OF THAILAND
Department of Alternative Energy Development and Efficiency
MINISTRY OF ENERGY

KLONG LAM PLOK HYDROPOWER PROJECT

CIVIL WORKS AND TRANSMISSION LINE
SURGE TANK
RING GRIDER AND HANDRAIL

P&C MANAGEMENT CO.,LTD.

Department of Alternative Energy Development and Efficiency
MINISTRY OF ENERGY

DESIGNED	สิริ.29074	28.6.2226	REVIEWED
DRAWN			SUBMITTED
CHECKED		28.6.2226	RECOMMENDED
PROJECT MANAGER		08/03/2559 DATE	APPROVED

DRAWING NO. KLP–ST–05

SHEET NO. 52 OF 110

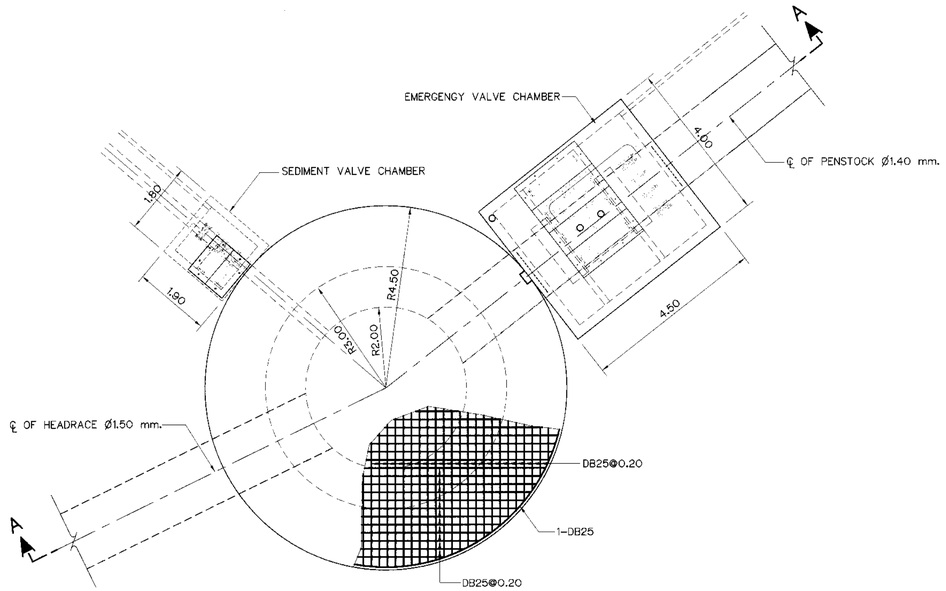

LOWER STEEL PLAN

SCALE 1:75

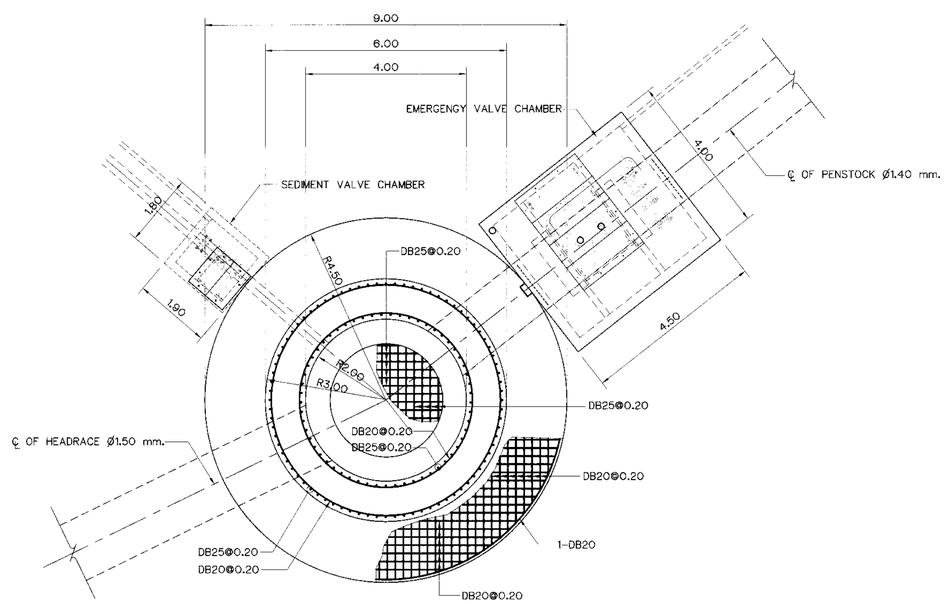

UPPER STEEL PLAN

SCALE 1:75

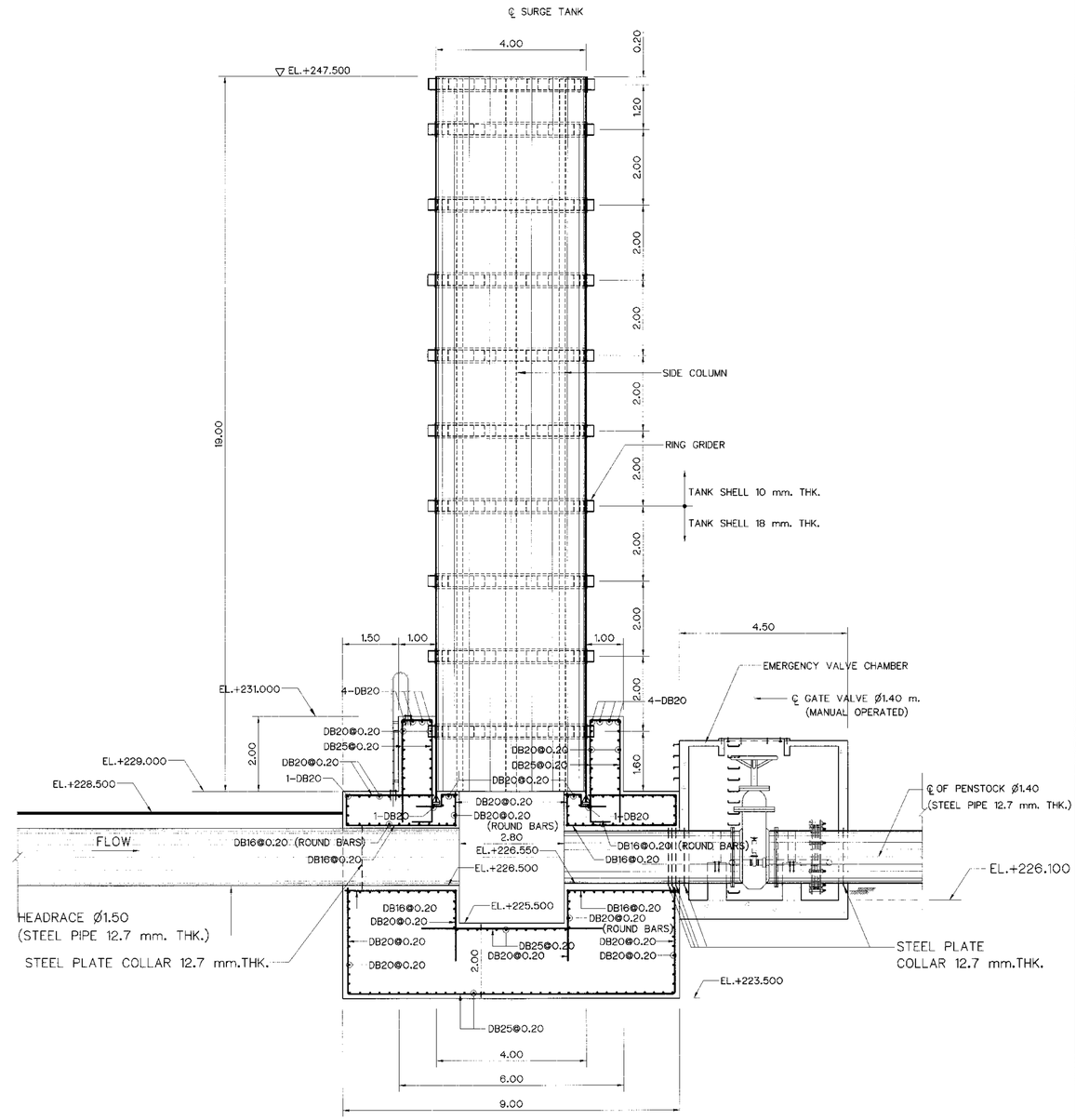

SECTION A–A

SCALE 1:75

NOTES :

1. ALL DIMENSIONS AND ELEVATIONS ARE IN METERS, UNLESS OTHERWISE SHOWN
2. STEEL PIPE CONFORM TO JIS G 3101 SS34
3. BASE OF CONCRETE FOUNDATION SHALL BE DETERMINED IN FIELD BY EMBEDING TO STABLE ROCK FOUNDATION WITH A ALLOWABLE BEARING CAPACITY NOT LESS THAN 20 T/m^2
4. CORROSION PROTECTION OF STEEL PIPE OR GUARDRAIL IS WARNED TO STRICTLY FOLLOW GALVANIZE SPECIFICATION
5. STEEL TANK , GIRDER AND STIFFENER SHALL CONFORM TO JIS G 3101 SS34

REFERENCE DRAWING :

1. SURGE TANK, GENERAL LAY-OUT — KLP-ST-01
2. SURGE TANK, PLAN AND SECTIONS — KLP-ST-02

0 0.5 1 1.5 2
SCALE 1:25 METERS

0 1 2 3 4 5 6
SCALE 1:75 METERS

NO.	DATE	REVISIONS	CHECKED	APPROVED
3				
2				
1				

CONSULTANTS | DEDE

KINGDOM OF THAILAND
Department of Alternative Energy Development and Efficiency
MINISTRY OF ENERGY

KLONG LAM PLOK HYDROPOWER PROJECT

CIVIL WORKS AND TRANSMISSION LINE
SURGE TANK
REINFORCEMENT DETAILS

P&C MANAGEMENT CO.,LTD.

Department of Alternative Energy Development and Efficiency
MINISTRY OF ENERGY

REVIEWED		
DESIGNED	28.29074	28.6226
DRAWN		
CHECKED		28.6226
SUBMITTED		
RECOMMENDED		
APPROVED	P. Hansell	

PROJECT MANAGER — 08/03/2559 DATE

DRAWING NO. KLP-ST-06

SHEET NO. 53 OF 110

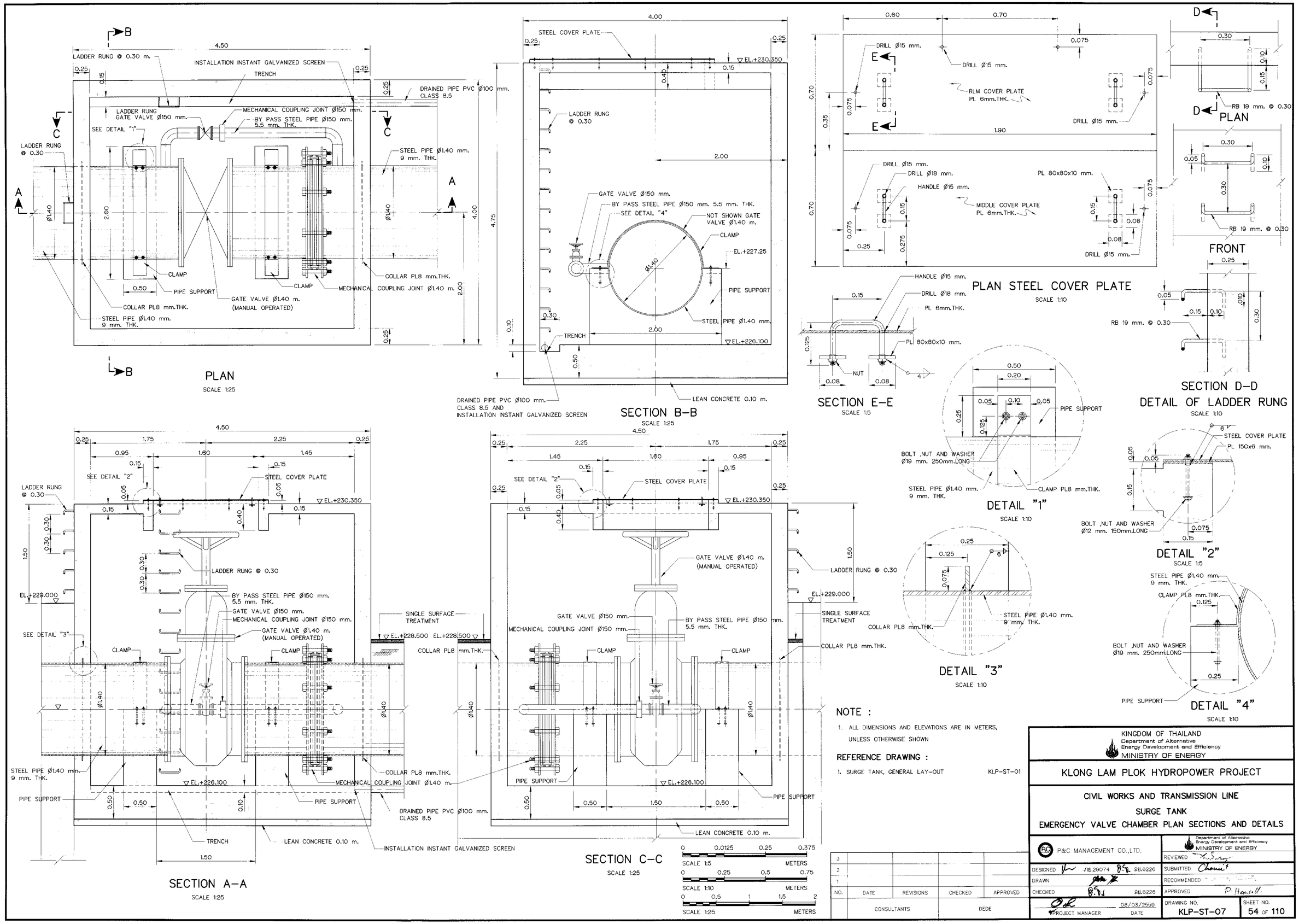

NOTE :

1. ALL DIMENSIONS AND ELEVATIONS ARE IN METERS, UNLESS OTHERWISE SHOWN

REFERENCE DRAWING :

1. SURGE TANK, GENERAL LAY-OUT KLP-ST-01

NO.	DATE	REVISIONS	CHECKED	APPROVED
3				
2				
1				

CONSULTANTS DEDE

KINGDOM OF THAILAND
Department of Alternative Energy Development and Efficiency
MINISTRY OF ENERGY

KLONG LAM PLOK HYDROPOWER PROJECT

CIVIL WORKS AND TRANSMISSION LINE
SURGE TANK
EMERGENCY VALVE CHAMBER PLAN SECTIONS AND DETAILS

P&C MANAGEMENT CO.,LTD.

DESIGNED	28.29074	28.6226	SUBMITTED
DRAWN			RECOMMENDED
CHECKED		28.6226	APPROVED
PROJECT MANAGER		08/03/2559 DATE	

REVIEWED

DRAWING NO. KLP-ST-07

SHEET NO. 54 OF 110

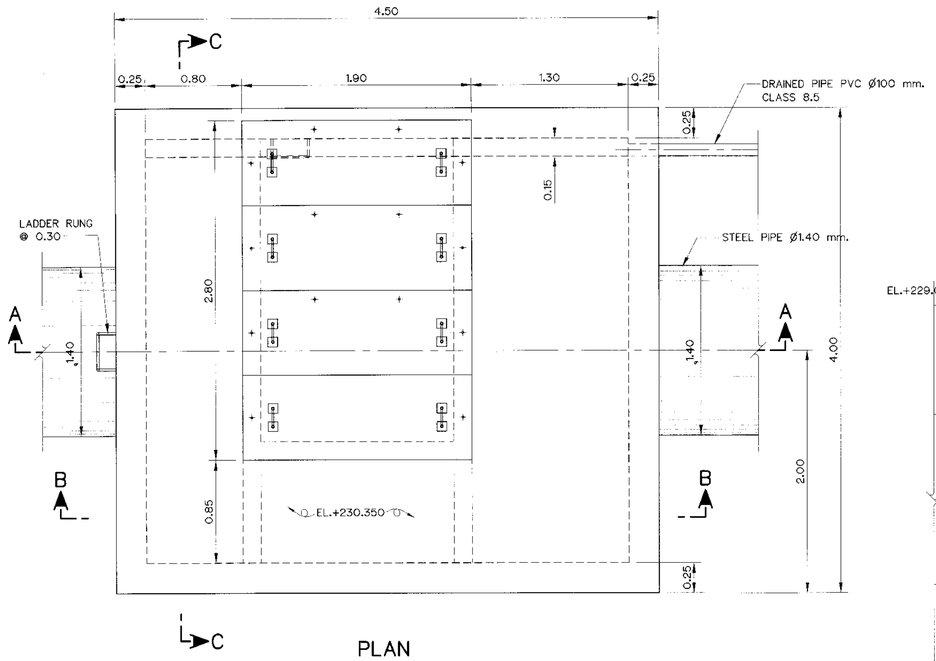

PLAN

SCALE 1:25

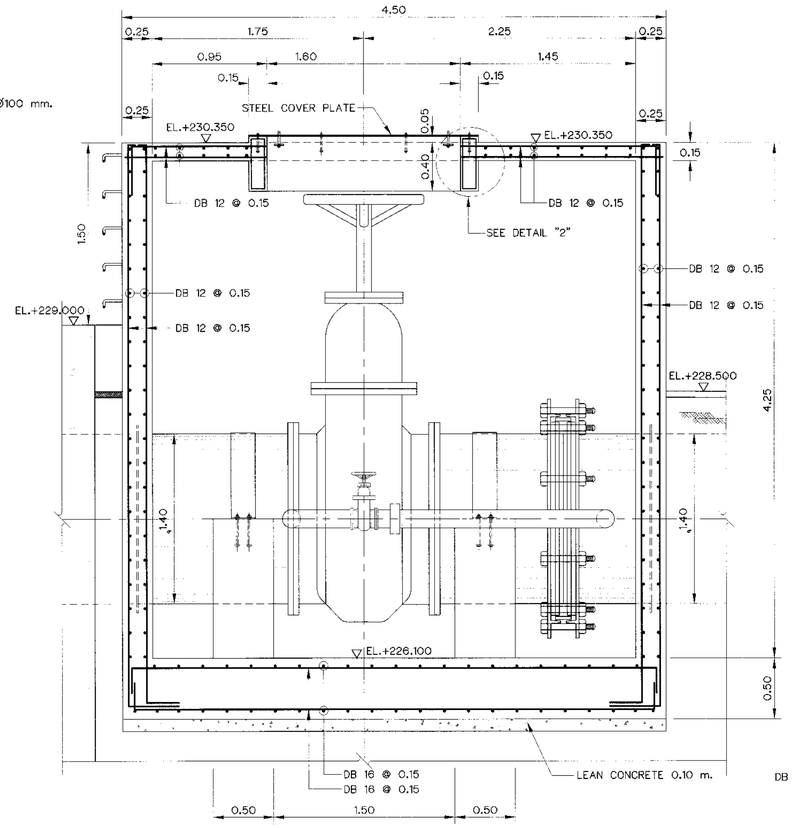

SECTION B–B

SCALE 1:25

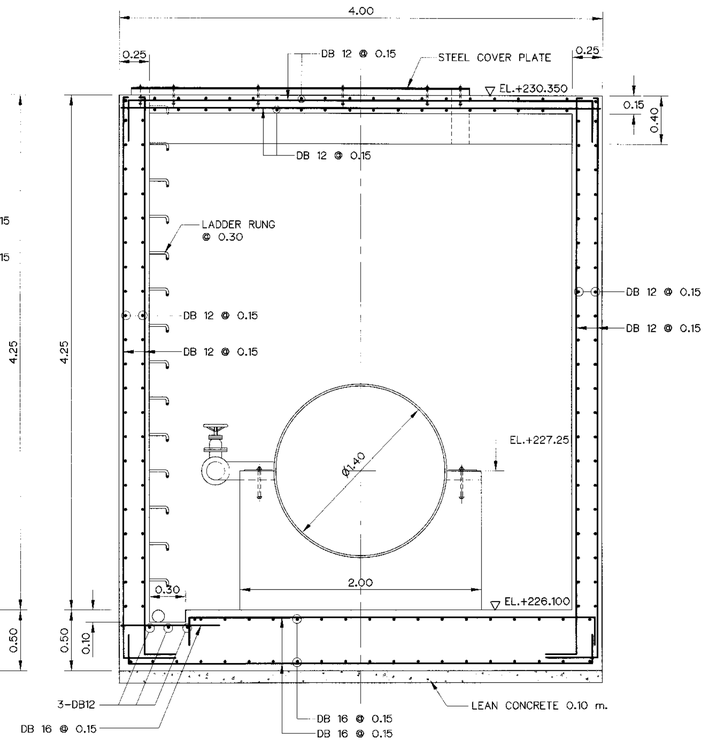

SECTION C–C

SCALE 1:25

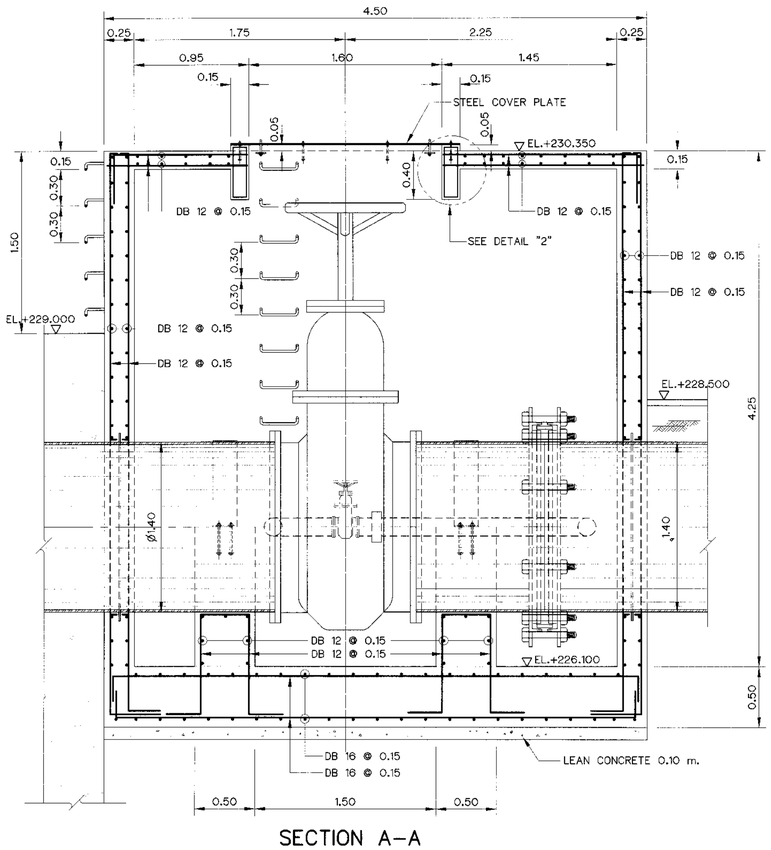

SECTION A–A

SCALE 1:25

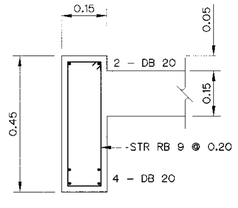

DETAIL "2"

SCALE 1:10

SCALE 1:10 — 0, 0.25, 0.5, 0.75 METERS

SCALE 1:25 — 0, 0.5, 1, 1.5, 2 METERS

NOTE :

1. ALL DIMENSIONS AND ELEVATIONS ARE IN METERS, UNLESS OTHERWISE SHOWN

REFERENCE DRAWING :

1. EMERGENCY VALVE CHAMBER PLAN SECTIONS AND DETAILS KLP-ST-07

NO.	DATE	REVISIONS	CHECKED	APPROVED
3				
2				
1				

CONSULTANTS — DEDE

KINGDOM OF THAILAND
Department of Alternative Energy Development and Efficiency
MINISTRY OF ENERGY

KLONG LAM PLOK HYDROPOWER PROJECT

CIVIL WORKS AND TRANSMISSION LINE

SURGE TANK

EMERGENCY VALVE CHAMBER REINFORCEMENT DETAILS

P&C MANAGEMENT CO.,LTD.

Department of Alternative Energy Development and Efficiency MINISTRY OF ENERGY

DESIGNED	28.29074	28.6228	REVIEWED
DRAWN			SUBMITTED
			RECOMMENDED
CHECKED		28.6228	APPROVED
PROJECT MANAGER		08/03/2559 DATE	DRAWING NO. KLP-ST-08

SHEET NO. 55 OF 110

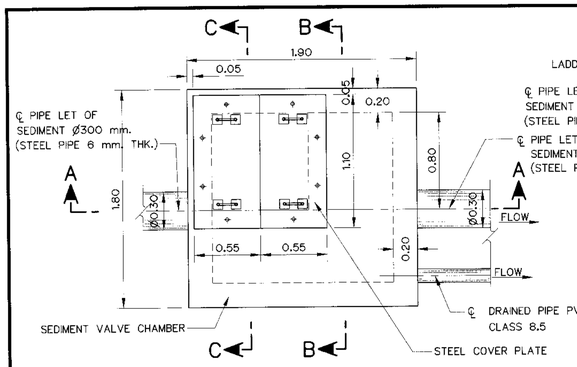

PLAN

SCALE 1:25

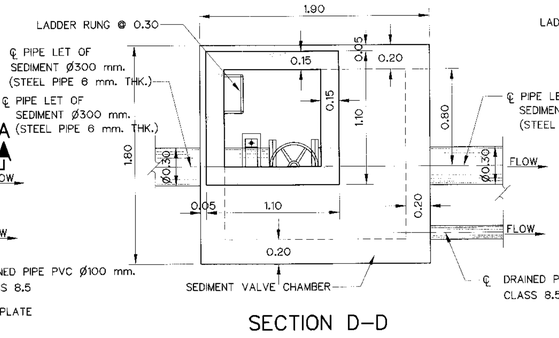

SECTION D–D

SCALE 1:25

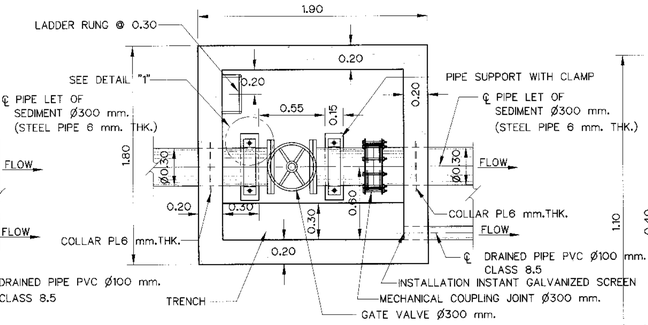

SECTION E–E

SCALE 1:25

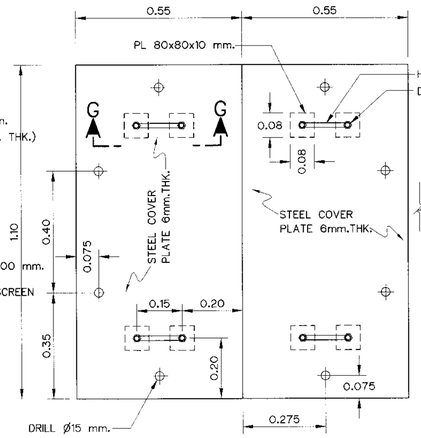

PLAN STEEL COVER PLATE

SCALE 1:10

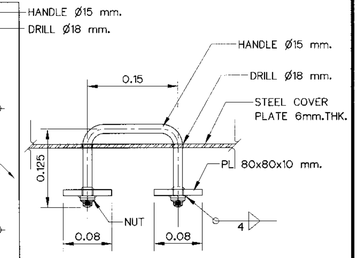

SECTION G–G

SCALE 1:5

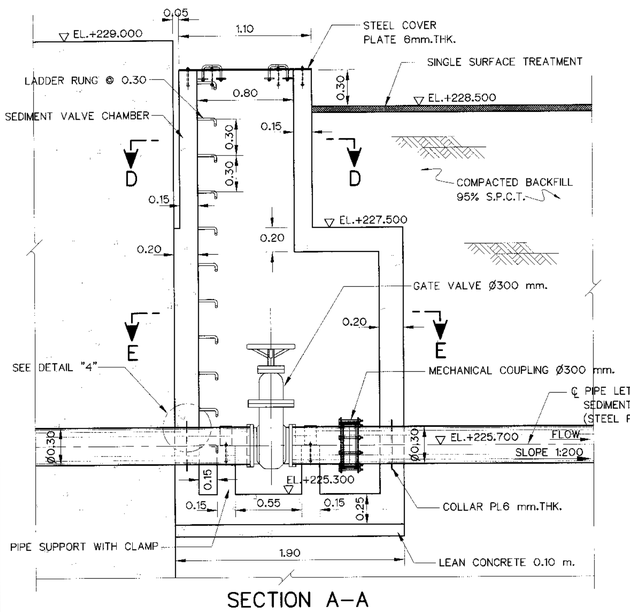

SECTION A–A

SCALE 1:25

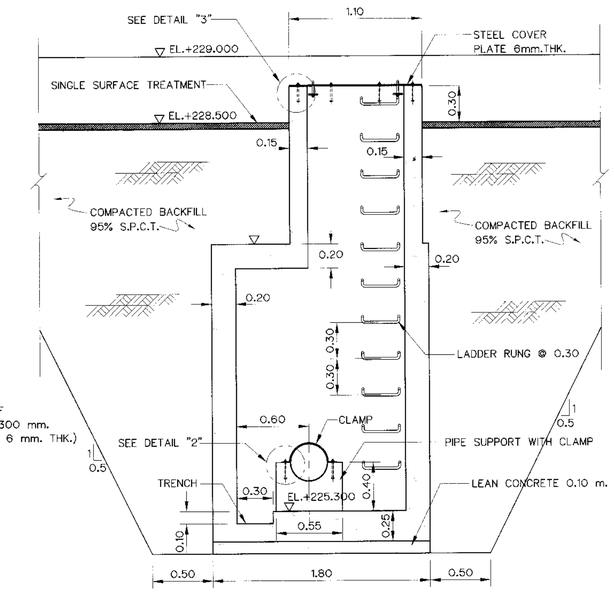

SECTION C–C

SCALE 1:25

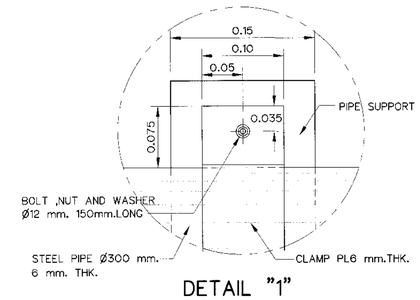

DETAIL "1"

NOT TO SCALE

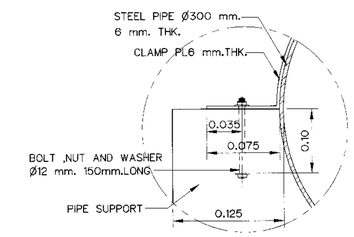

DETAIL "2"

NOT TO SCALE

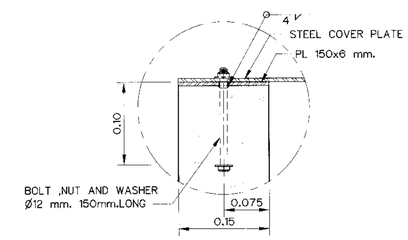

DETAIL "3"

NOT TO SCALE

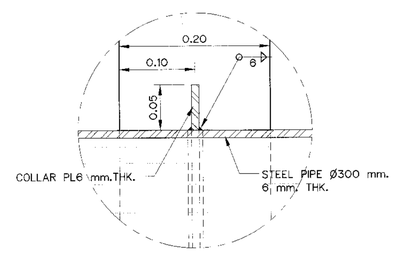

DETAIL "4"

NOT TO SCALE

NOTE :

1. ALL DIMENSIONS AND ELEVATIONS ARE IN METERS, UNLESS OTHERWISE SHOWN

REFERENCE DRAWING :

1. SURGE TANK, GENERAL LAY-OUT KLP-ST-01

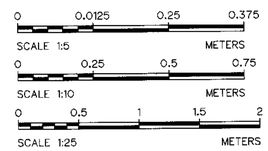

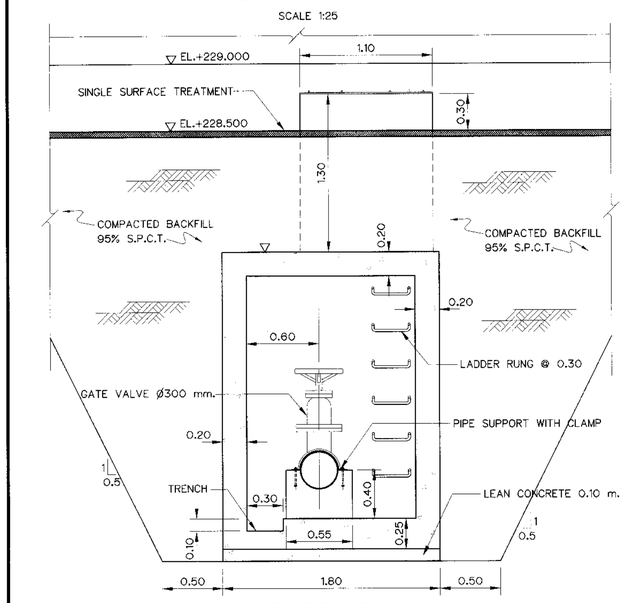

SECTION B–B

SCALE 1:25

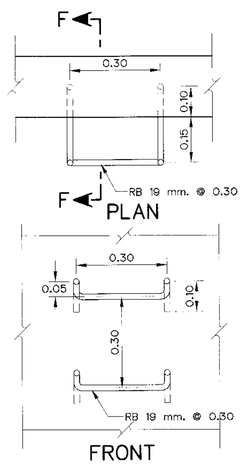

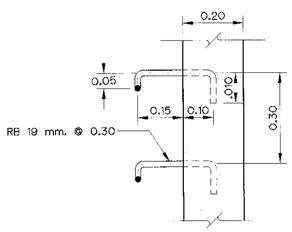

SECTION F–F

DETAIL OF LADDER RUNG

SCALE 1:10

KINGDOM OF THAILAND
Department of Alternative Energy Development and Efficiency
MINISTRY OF ENERGY

KLONG LAM PLOK HYDROPOWER PROJECT

CIVIL WORKS AND TRANSMISSION LINE
SURGE TANK
SEDIMENT VALVE CHAMBER PLAN SECTIONS AND DETAILS

P&C MANAGEMENT CO.,LTD.

NO.	DATE	REVISIONS	CHECKED	APPROVED
3				
2				
1				
	CONSULTANTS		DEDE	

DESIGNED	วิสิฐ 28/2/2974	SUBMITTED	
DRAWN		RECOMMENDED	
CHECKED	28/6/2226	APPROVED	
PROJECT MANAGER	08/03/2559 DATE	DRAWING NO. KLP-ST-09	SHEET NO. 56 OF 110

Department of Alternative Energy Development and Efficiency
MINISTRY OF ENERGY
REVIEWED

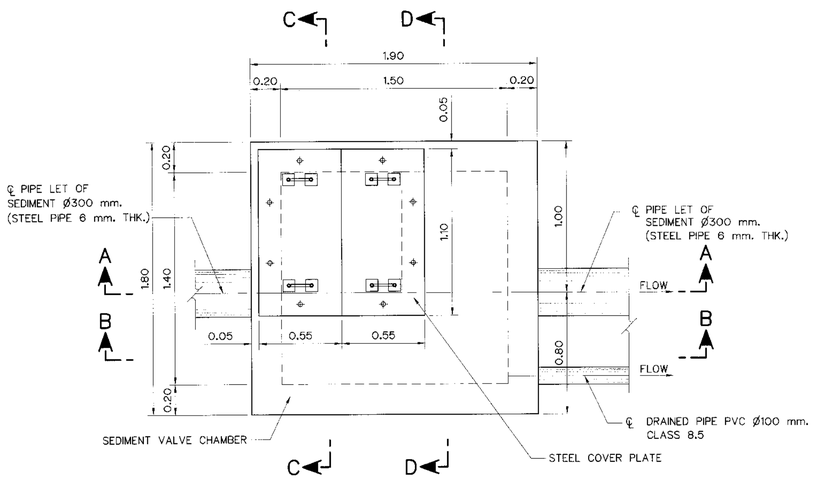

PLAN

SCALE 1:20

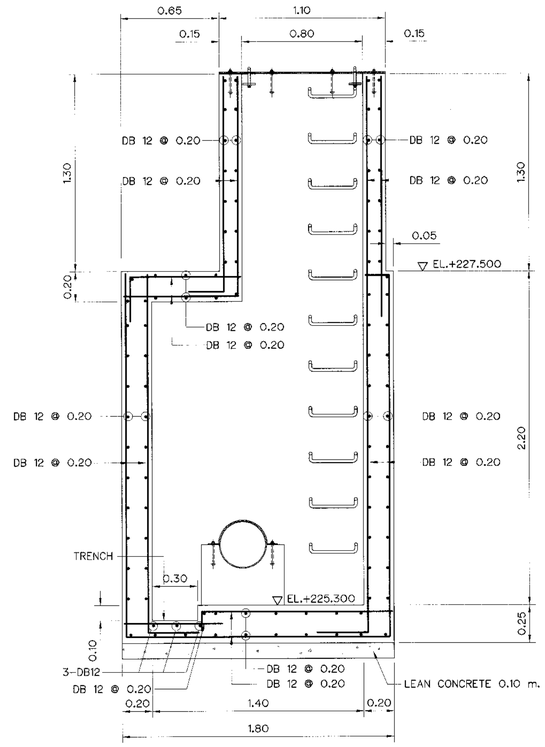

SECTION C-C

SCALE 1:20

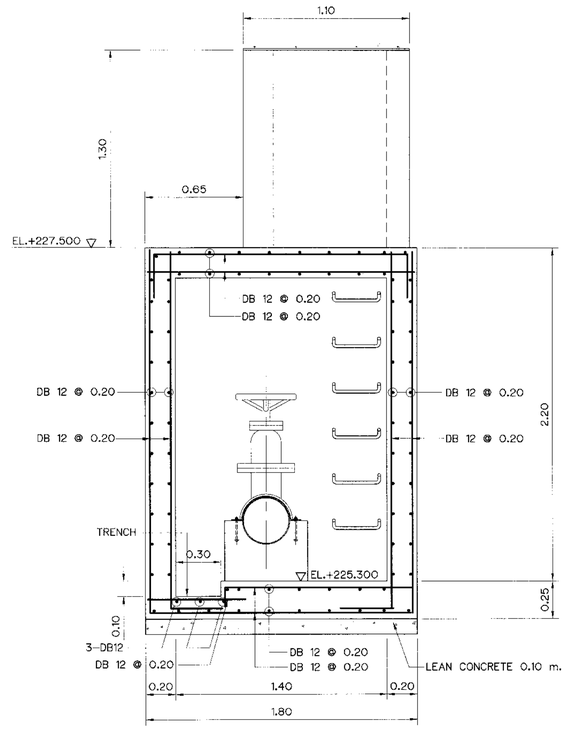

SECTION D-D

SCALE 1:20

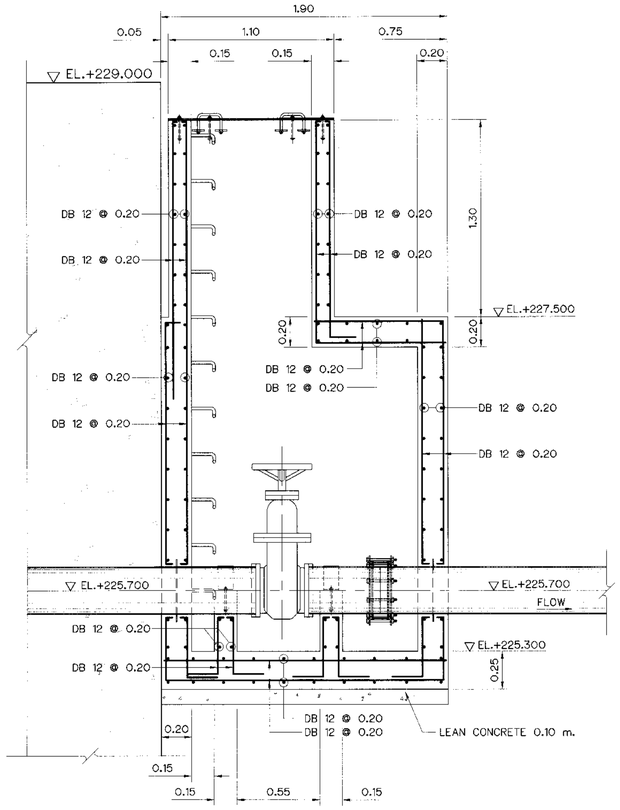

SECTION A-A

SCALE 1:20

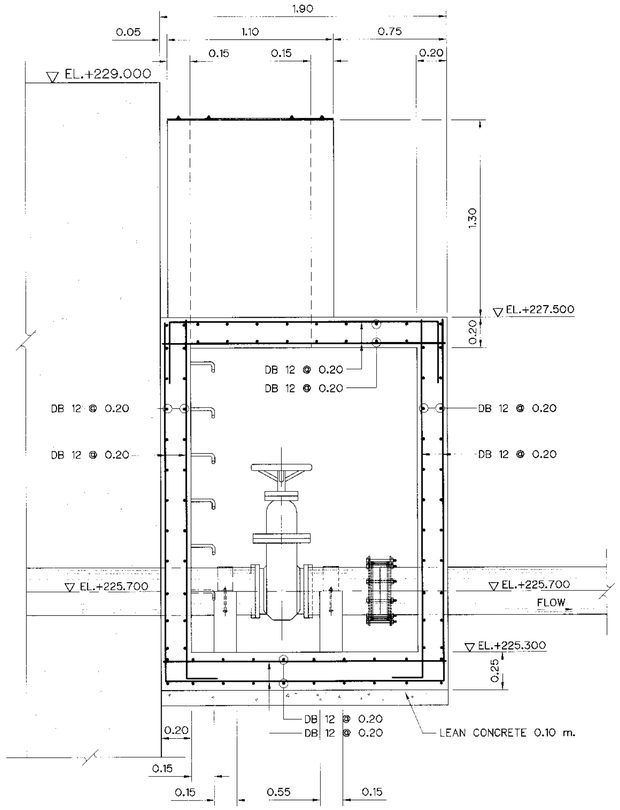

SECTION B-B

SCALE 1:20

NOTE :

1. ALL DIMENSIONS AND ELEVATIONS ARE IN METERS, UNLESS OTHERWISE SHOWN

REFERENCE DRAWING :

1. SEDIMENT VALVE CHAMBER PLAN SECTIONS AND DETAILS KLP-ST-09

0 0.5 1 1.5

SCALE 1:20 METERS

KINGDOM OF THAILAND
Department of Alternative Energy Development and Efficiency
MINISTRY OF ENERGY

KLONG LAM PLOK HYDROPOWER PROJECT

CIVIL WORKS AND TRANSMISSION LINE
SURGE TANK
SEDIMENT VALVE CHAMBER REINFORCEMENT DETAILS

NO.	DATE	REVISIONS	CHECKED	APPROVED
3				
2				
1				
	CONSULTANTS		DEDE	

P&C MANAGEMENT CO.,LTD.

DESIGNED 28.29074 28.6228
DRAWN
CHECKED 28.6226
PROJECT MANAGER 08/03/2559 DATE

Department of Alternative Energy Development and Efficiency MINISTRY OF ENERGY

REVIEWED
SUBMITTED
RECOMMENDED
APPROVED P. Hemsell

DRAWING NO. KLP-ST-10

SHEET NO. 57 OF 110

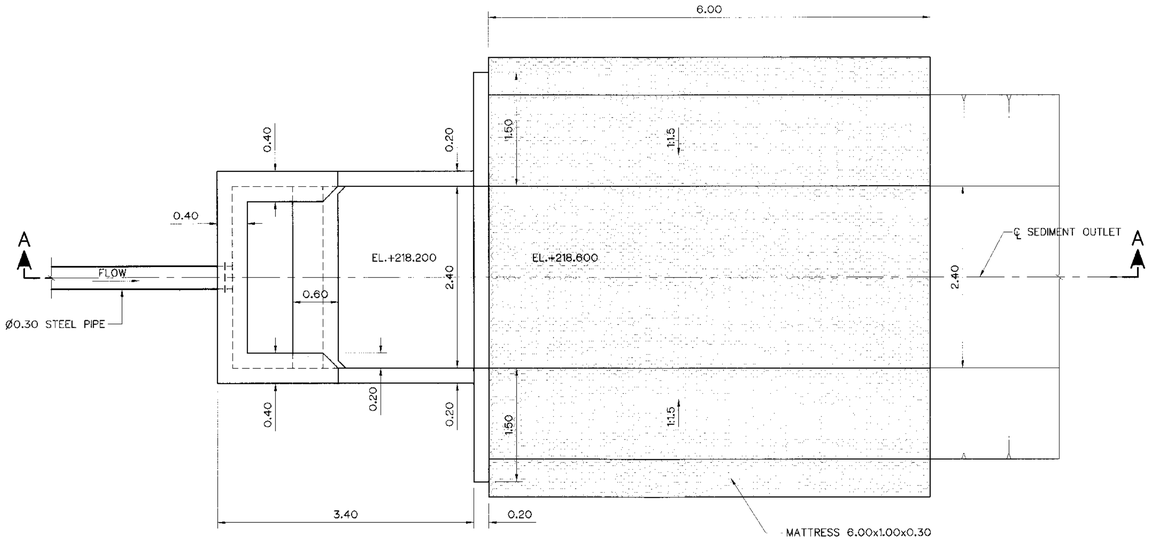

PLAN

SCALE 1:40

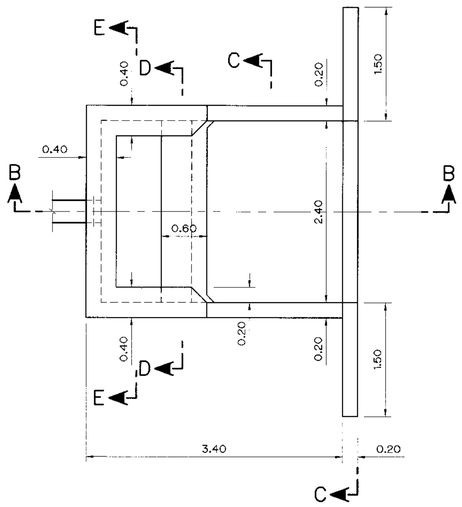

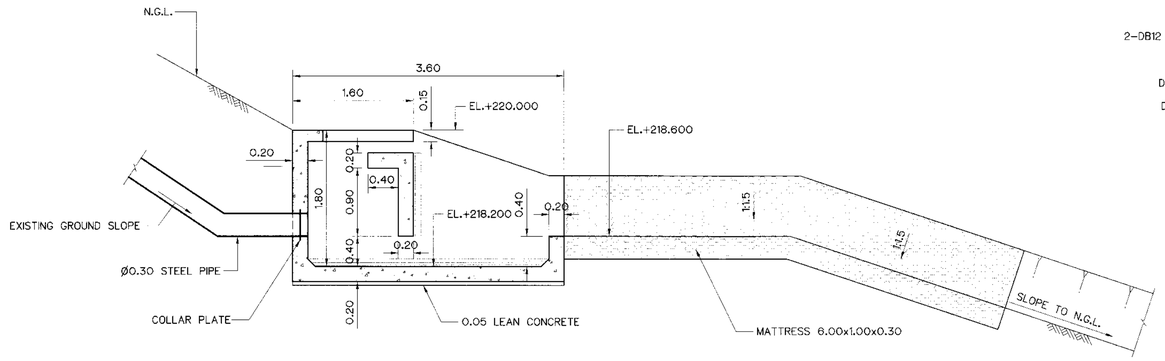

SECTION A–A

SCALE 1:40

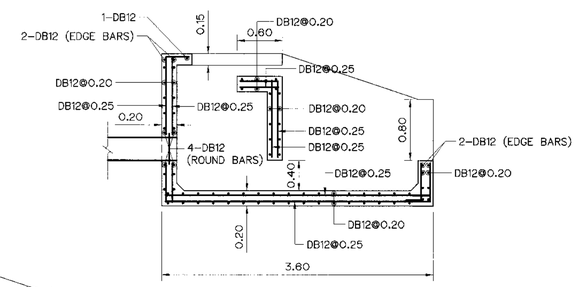

SECTION B–B

SCALE 1:40

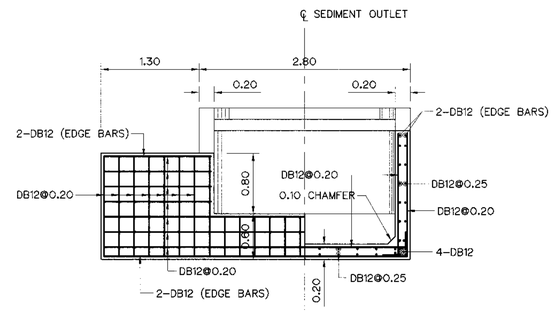

SECTION C–C

SCALE 1:40

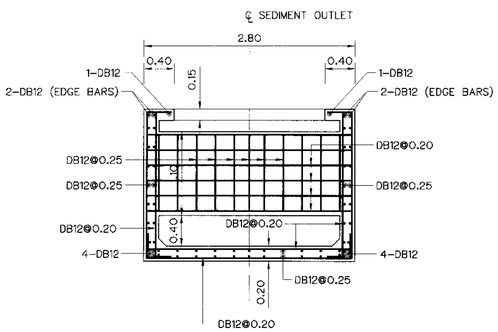

SECTION D–D

SCALE 1:40

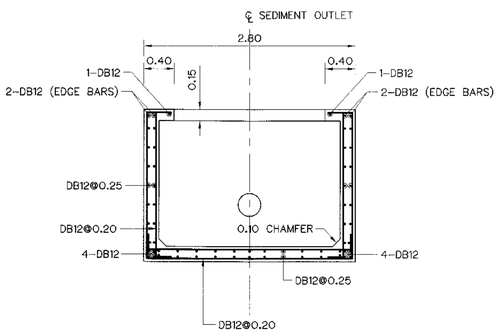

SECTION E–E

SCALE 1:40

NOTES :

1. ALL DIMENSIONS AND ELEVATIONS (M.S.L.) ARE IN METERS, UNLESS OTHERWISE SHOWN.
2. SYMBOLS, ABBREVIATIONS AND GENERAL NOTES SEE DWG. NO. KLP-GN-03
3. CONCRETE DESIGN BASED ON THE COMPRESSIVE STRENGTH OF 210 KSC, STANDARD CYLINDER Ø0.15x0.30 m. TEST AT AGE 28 DAYS. UNLESS OTHERWISE INDICATED IN SPECIFIC DRAWINGS.
4. BEARING CAPACITY NOT LESS THAN 5 T/sq m

REFERENCE DRAWINGS :

1. SURGE TANK GENERAL LAY-OUT — KLP-ST-01

0 0.5 1 2 3
มาตราส่วน 1:40 เมตร

NO.	DATE	REVISIONS	CHECKED	APPROVED
3				
2				
1				

CONSULTANTS — DEDE

KINGDOM OF THAILAND
Department of Alternative Energy Development and Efficiency
MINISTRY OF ENERGY

KLONG LAM PLOK HYDROPOWER PROJECT

CIVIL WORKS AND TRANSMISSION LINE
SURGE TANK
SEDIMENT OUTLET PLAN SECTION AND DETAILS

P&C MANAGEMENT CO.,LTD.

Department of Alternative Energy Development and Efficiency
MINISTRY OF ENERGY

REVIEWED		
SUBMITTED		
RECOMMENDED		
APPROVED		
DESIGNED		
DRAWN		
CHECKED		
PROJECT MANAGER	08/03/2559 DATE	
DRAWING NO.	KLP-ST-11	
SHEET NO.	58 OF 110	

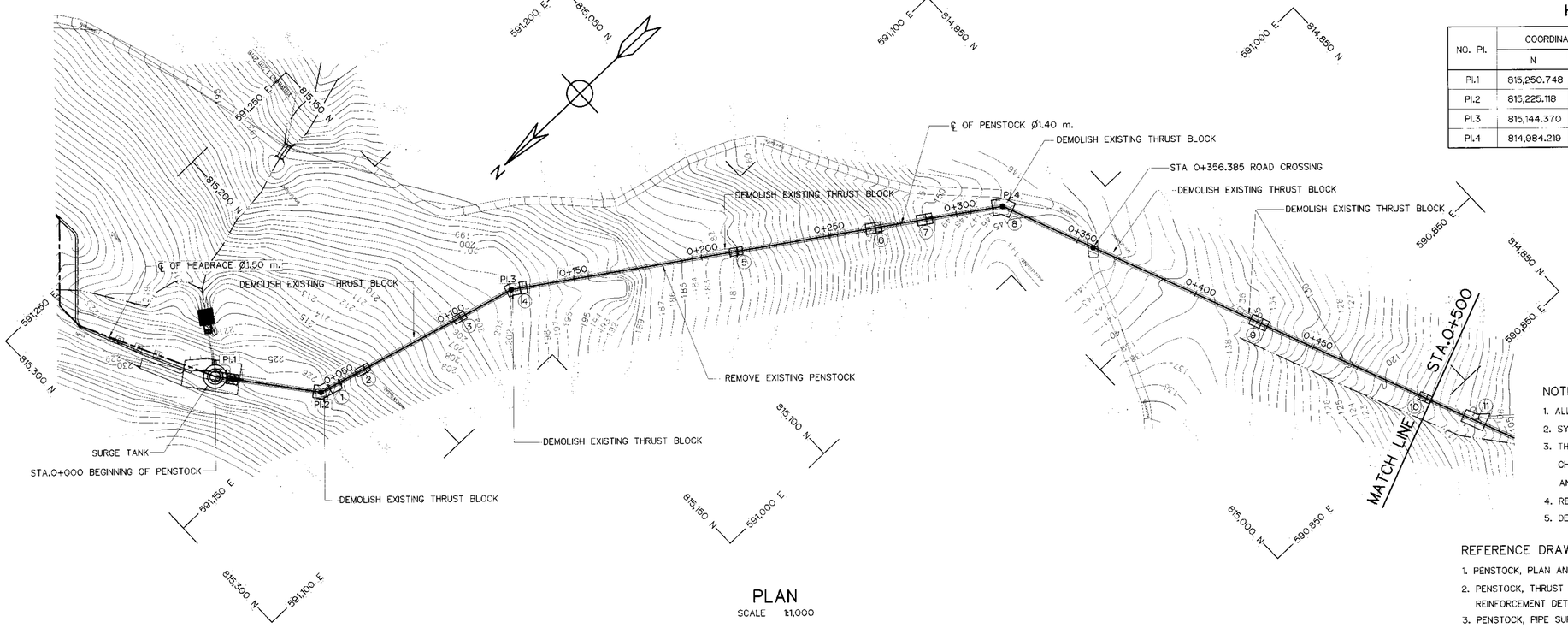

PLAN

SCALE 1:1,000

HORIZONTAL CURVE OF HEADRACE

NO. PI.	COORDINATE OF PI.		PI. TO PI.	DEFLECTION ANGLE (△)	PI. STA.	BEARING
	N	E	(m)	(° – ' – ")	(km)	(N/S ° – ' – " E/W)
PI.1	815,250.748	591,183.914	–	–	0+000.000	–
PI.2	815,225.118	591,151.169	41.583	36°– 44'–08.88"	0+041.583	S 51°– 56'–57.06"W
PI.3	815,144.370	591,129.210	83.681	18°– 39'–52.83"	0+125.264	S 15°– 12'– 48.18" W
PI.4	814,984.219	591,021.682	192.901	33°– 44'– 59.21"	0+318.165	S33°–52'– 41.01" W

NOTES :

1. ALL DIMENSIONS AND ELEVATIONS (M.S.L.) ARE IN METERS. UNLESS OTHERWISE SHOWN.
2. SYMBOLS, ABBREVIATIONS AND GENERAL NOTES SEE DWG. NO. KLP–GN–03
3. THE ALIGNMENT OF THE PENSTOCK AND RELATED STRUCTURES SHALL BE CHECK AND CORRECTED BY THE CONTRACTOR TO SUIT THE FIELD CONDITIONS AND SHALL BE SUBMITTED TO DEDE'S FIELD ENGINEER FOR APPROVAL
4. REMOVE EXISTING HEADRACE
5. DEMOLISHED EXISTING THRUST BLOCKS

REFERENCE DRAWINGS :

1. PENSTOCK, PLAN AND PROFILE, STA. 0+500 TO STA. 0+693.571	KLP–PS–02
2. PENSTOCK, THRUST BLOCK PLAN ,SECTIONS REINFORCEMENT DETAILS 1/5 TO 5/5	KLP–PS–03 TO 07
3. PENSTOCK, PIPE SUPPORT, PLAN, SECTIONS AND DETAILS	KLP–PS–08
4. PENSTOCK, ROAD CROSSING PLAN, SECTIONS REINFORCEMENT	KLP–PS–14
5. HEADRACE, PIER SUPPORT FOR STA.0+000 TO STA.STA.0+044.583 OF PENSTOCK	KLP–HR–08

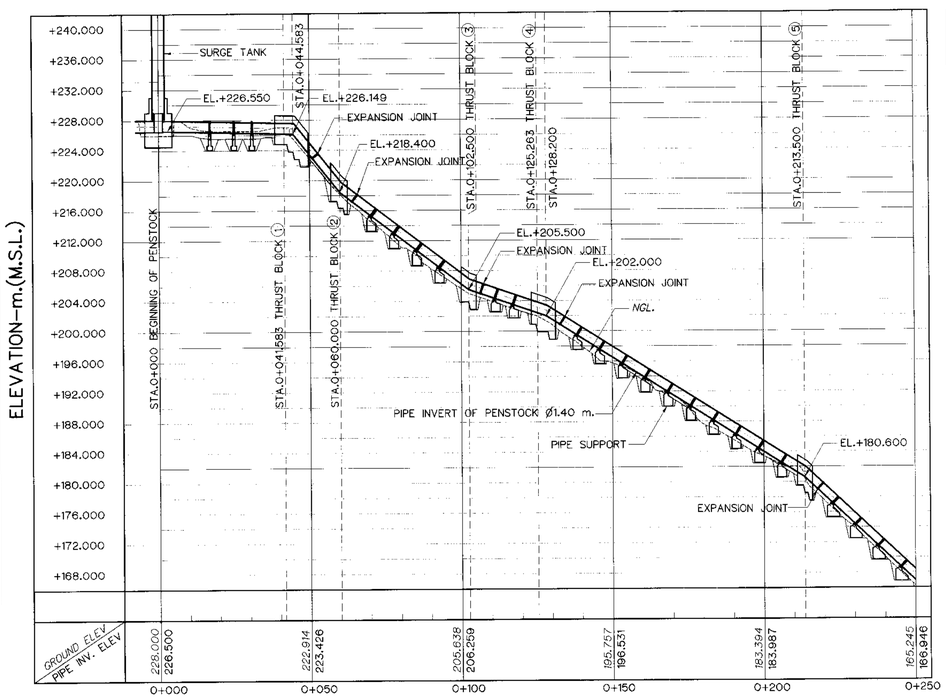

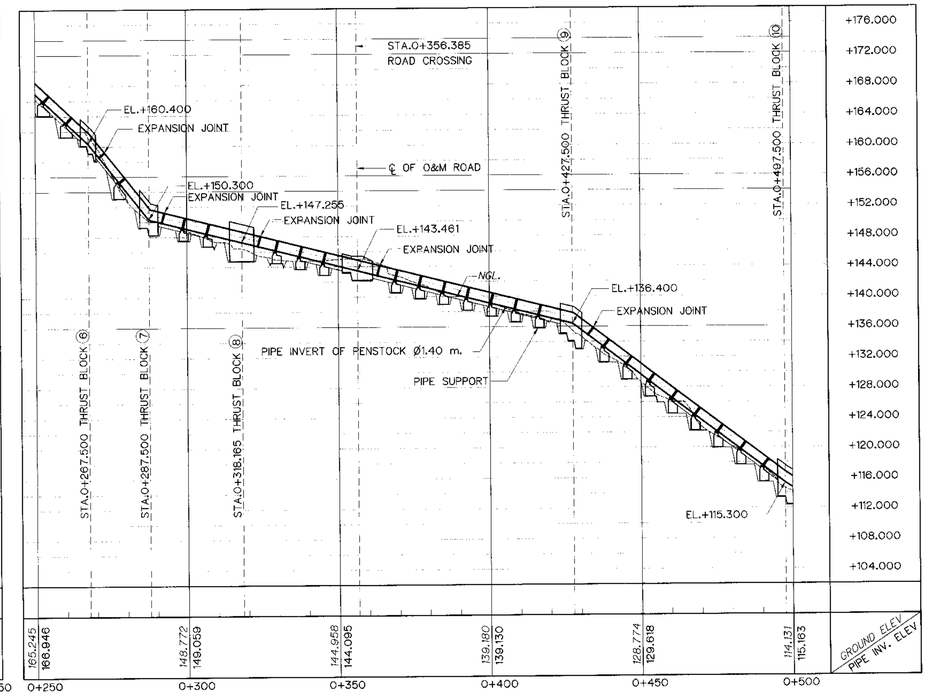

PROFILE

VERTICAL SCALE 1:400

HORIZONTAL SCALE 1:1,000

ELEVATION–m.(M.S.L.)

0 5 10 20 30 METERS
SCALE 1:400

0 10 20 40 60 80 METERS
SCALE 1:1,000

NO.	DATE	REVISIONS	CHECKED	APPROVED
3				
2				
1				

CONSULTANTS | DEDE

KINGDOM OF THAILAND
Department of Alternative Energy Development and Efficiency
MINISTRY OF ENERGY

KLONG LAM PLOK HYDROPOWER PROJECT

CIVIL WORKS AND TRANSMISSION LINE
PENSTOCK
PLAN AND PROFILE, STA. 0+000 TO STA. 0+500

P&C MANAGEMENT CO.,LTD.

Department of Alternative Energy Development and Efficiency
MINISTRY OF ENERGY

DESIGNED	ส.29074	REVIEWED	
DRAWN		SUBMITTED	
CHECKED	สิน.6226	RECOMMENDED	
		APPROVED	
PROJECT MANAGER	08/03/2559 DATE	DRAWING NO. KLP–PS–01	SHEET NO. 59 OF 110

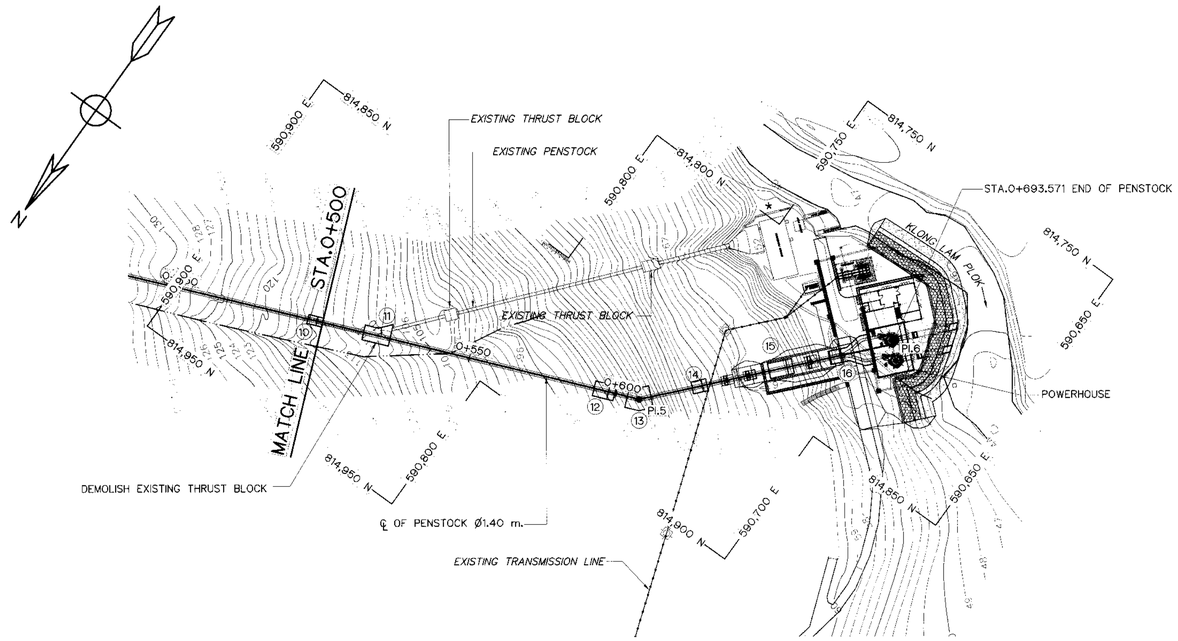

PLAN

SCALE 1:1,000

HORIZONTAL CURVE OF HEADRACE

NO. PI.	COORDINATE OF PI.		PI. TO PI.	DEFLECTION ANGLE (△)	PI. STA.	BEARING
	N	E	(m)	(° – ' – ")	(km)	(N/S ° – ' – " E/W)
PI.5	814,873.965	590,753.808	289.678	25°– 42'– 42.07"	0+607.842	S67°– 37'– 40.22" W
PI.6	814,810.169	590,696.571	85.729		0+693.571	

NOTES :

1. ALL DIMENSIONS AND ELEVATIONS (M.S.L.) ARE IN METERS. UNLESS OTHERWISE SHOWN.
2. SYMBOLS, ABBREVIATIONS AND GENERAL NOTES SEE DWG. NO. KLP–GN–03
3. THE ALIGNMENT OF THE PENSTOCK AND RELATED STRUCTURES SHALL BE CHECK AND CORRECTED BY THE CONTRACTOR TO SUIT THE FIELD CONDITIONS AND SHALL BE SUBMITTED TO DEDE'S FIELD ENGINEER FOR APPROVAL

REFERENCE DRAWINGS :

1. PENSTOCK, PLAN AND PROFILE, STA. 0+000 TO STA. 0+500 — KLP–PS–01
2. PENSTOCK, THRUST BLOCK PLAN ,SECTIONS REINFORCEMENT DETAILS 1/5 TO 5/5 — KLP–PS–03 TO 07
3. PENSTOCK, PIPE SUPPORT, PLAN, SECTIONS AND DETAILS — KLP–PS–08

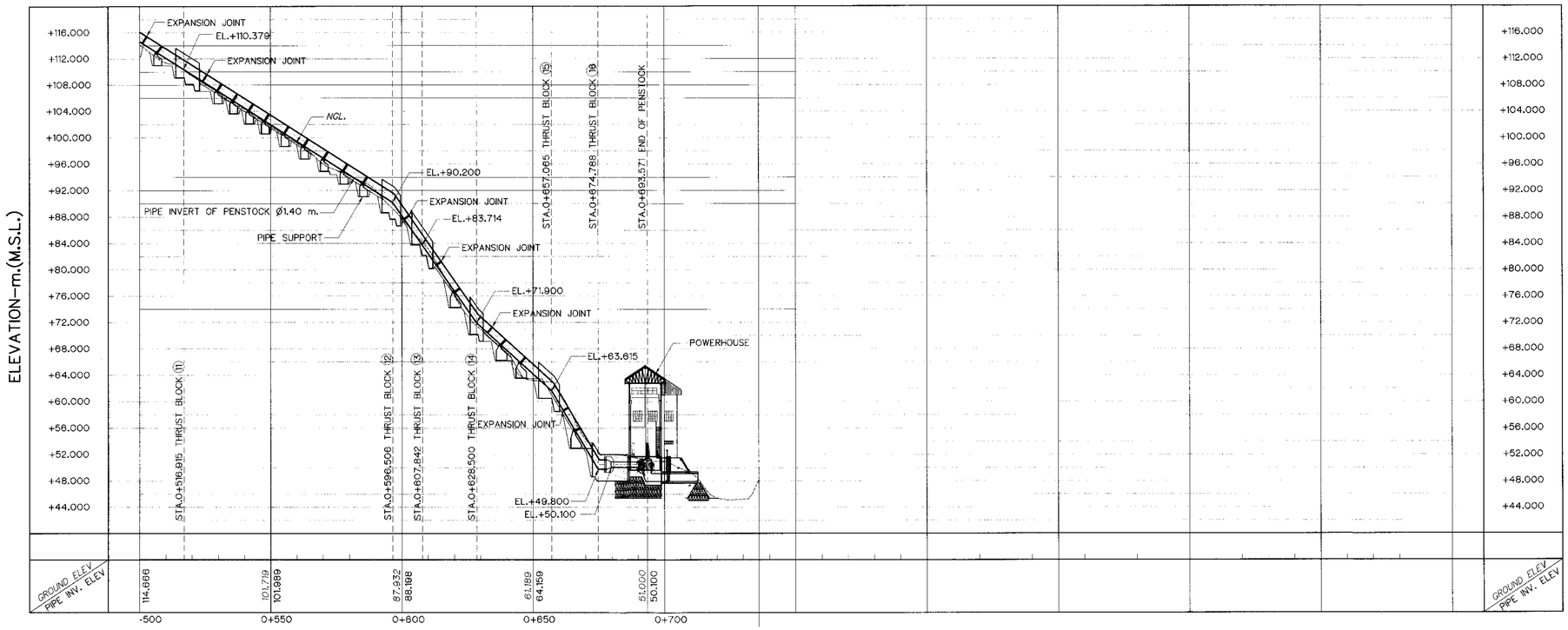

PROFILE

VERTICAL SCALE 1:400

HORIZONTAL SCALE 1:1,000

0 5 10 20 30
SCALE 1:400 METERS

0 10 20 40 60 80
SCALE 1:1,000 METERS

KINGDOM OF THAILAND
Department of Alternative Energy Development and Efficiency
MINISTRY OF ENERGY

KLONG LAM PLOK HYDROPOWER PROJECT

CIVIL WORKS AND TRANSMISSION LINE
PENSTOCK
PLAN AND PROFILE, STA. 0+500 TO STA. 0+693.571

NO.	DATE	REVISIONS	CHECKED	APPROVED
3				
2				
1				

CONSULTANTS — DEDE

P&C MANAGEMENT CO.,LTD.

DESIGNED — 28.29074 — 28.6226
DRAWN
CHECKED — 28.6226
PROJECT MANAGER — 08/03/2559 DATE

Department of Alternative Energy Development and Efficiency
MINISTRY OF ENERGY

REVIEWED
SUBMITTED
RECOMMENDED
APPROVED

DRAWING NO. KLP–PS–02

SHEET NO. 60 OF 110

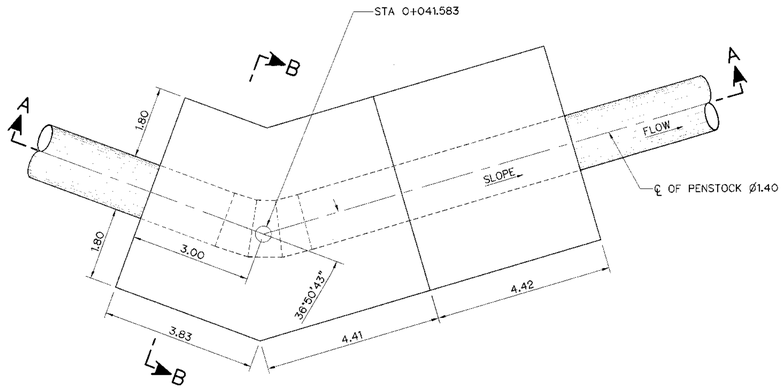

PLAN (THRUST BLOCK ①)
SCALE 1:75

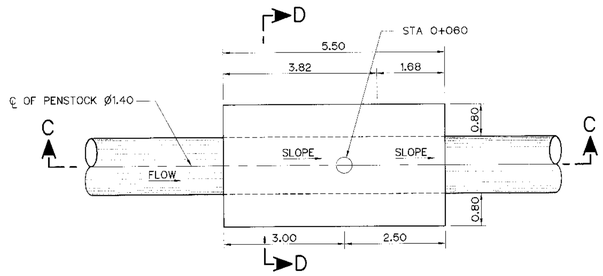

PLAN (THRUST BLOCK ②)
SCALE 1:75

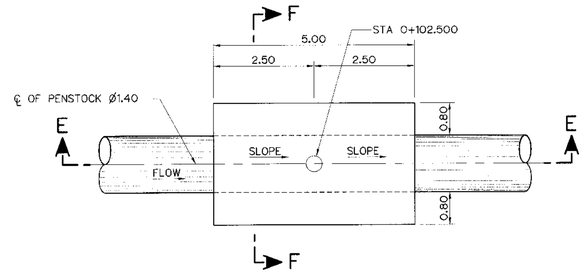

PLAN (THRUST BLOCK ③)
SCALE 1:75

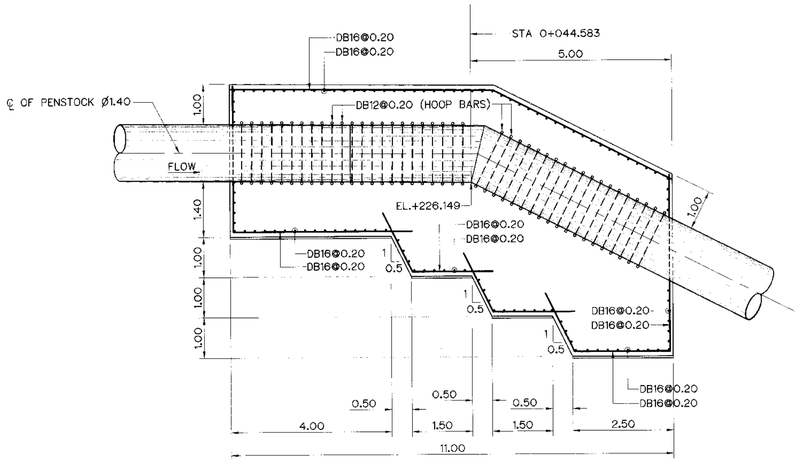

SECTION A–A
SCALE 1:75

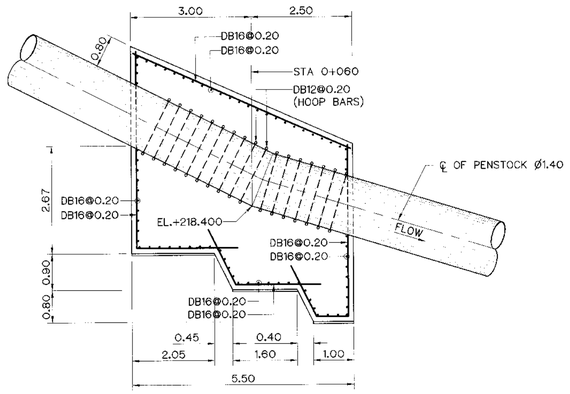

SECTION C–C
SCALE 1:75

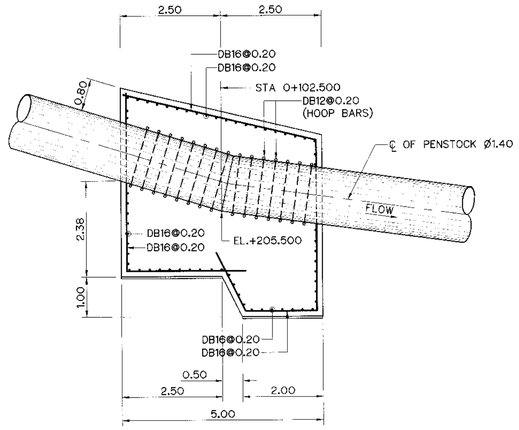

SECTION E–E
SCALE 1:75

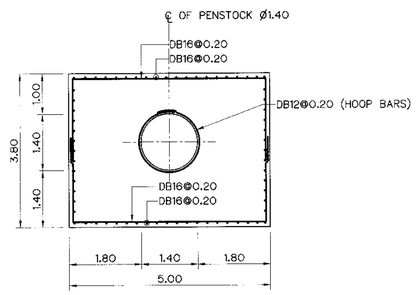

SECTION B–B
SCALE 1:75

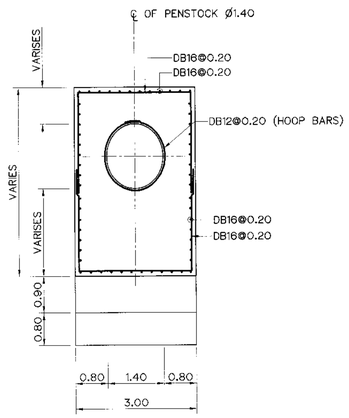

SECTION D–D
SCALE 1:75

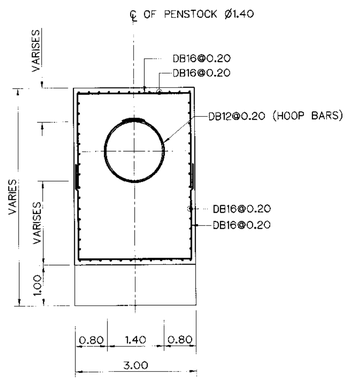

SECTION F–F
SCALE 1:75

0 1 2 3 4 5 6
SCALE 1:75 METERS

NOTES :

1. ALL DIMENSIONS AND ELEVATIONS (M.S.L.) ARE IN METERS. UNLESS OTHERWISE SHOWN.
2. SYMBOLS, ABBREVIATIONS AND GENERAL NOTES SEE DWG. NO. KLP–GN–03
3. THE ALIGNMENT OF THE HEADRACE AND RELATED STRUCTURES SHALL BE CHECK AND CORRECTED BY THE CONTRACTOR TO SUIT THE FIELD CONDITIONS AND SHALL BE SUBMITTED TO DEDE'S FIELD ENGINEER FOR APPROVAL

REFERENCE DRAWINGS :

1. PENSTOCK PLAN AND PROFILE, STA. 0+500 TO STA. 0+893.571 KLP–PS–01 TO 02

NO.	DATE	REVISIONS	CHECKED	APPROVED
3				
2				
1				
	CONSULTANTS		DEDE	

KINGDOM OF THAILAND
Department of Alternative Energy Development and Efficiency
MINISTRY OF ENERGY

KLONG LAM PLOK HYDROPOWER PROJECT

CIVIL WORKS AND TRANSMISSION LINE

PENSTOCK

THRUST BLOCK PLAN ,SECTIONS REINFORCEMENT DETAILS 1/5

P&C MANAGEMENT CO.,LTD.

Department of Alternative Energy Development and Efficiency
MINISTRY OF ENERGY

DESIGNED ภัททิยา 29074 ศิริ. ศิริ.6226
DRAWN
CHECKED ศิริ. ศิริ.6226
PROJECT MANAGER 08/03/2559 DATE

REVIEWED
SUBMITTED
RECOMMENDED
APPROVED

DRAWING NO. KLP–PS–03
SHEET NO. 61 OF 110

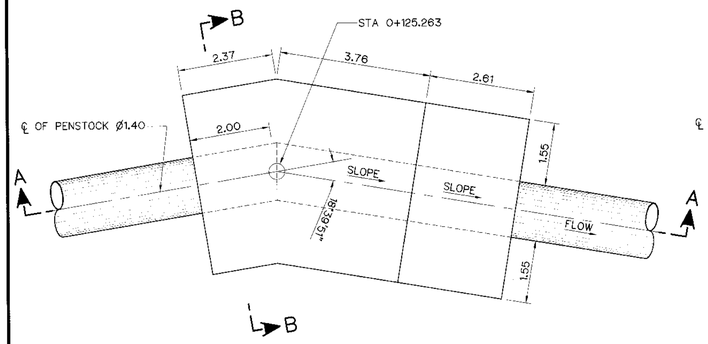

PLAN (THRUST BLOCK 4)
SCALE 1:75

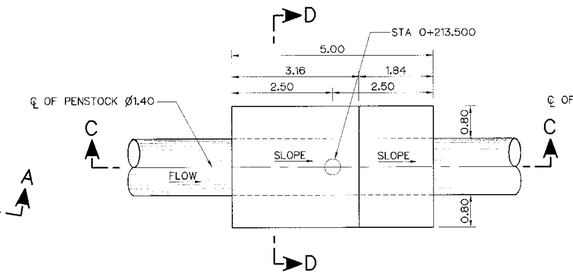

PLAN (THRUST BLOCK 5)
SCALE 1:75

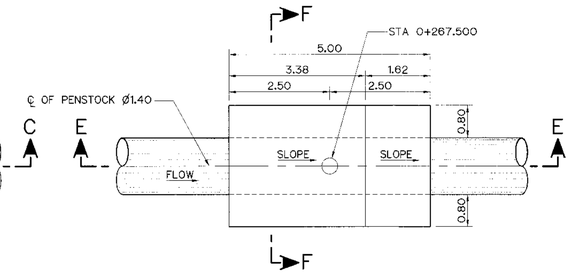

PLAN (THRUST BLOCK 6)
SCALE 1:75

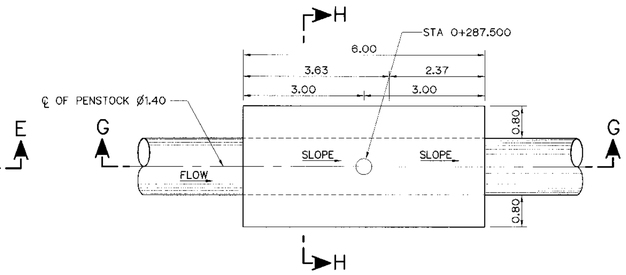

PLAN (THRUST BLOCK 7)
SCALE 1:75

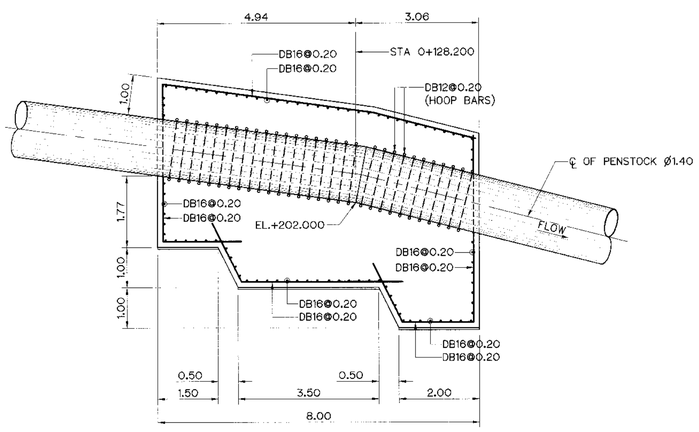

SECTION A–A
SCALE 1:75

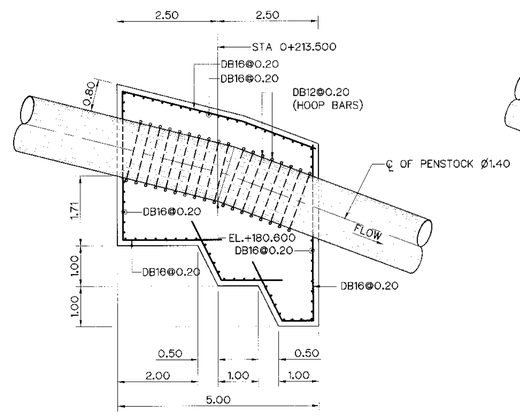

SECTION C–C
SCALE 1:75

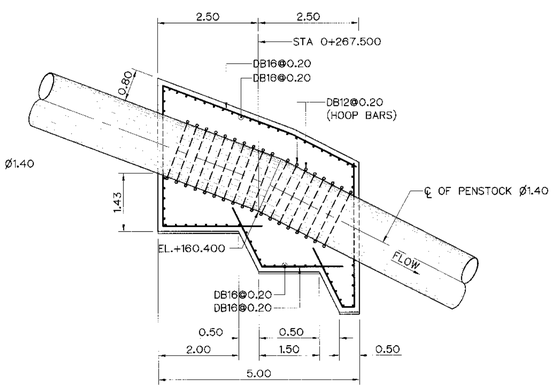

SECTION E–E
SCALE 1:75

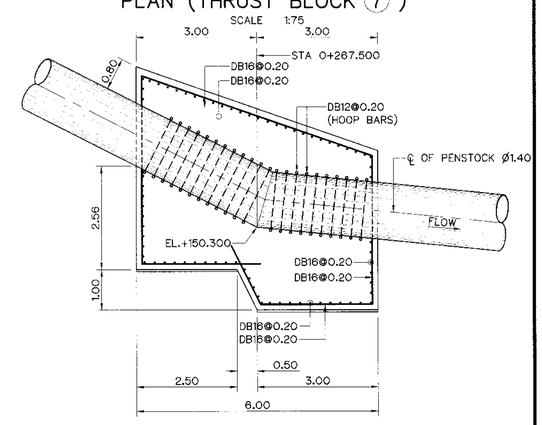

SECTION G–G
SCALE 1:75

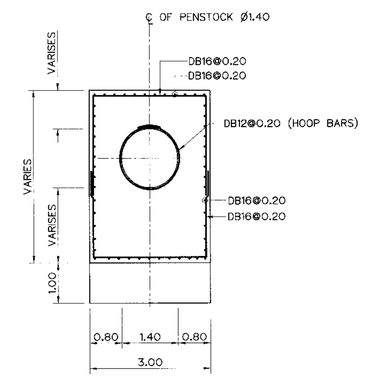

SECTION H–H
SCALE 1:75

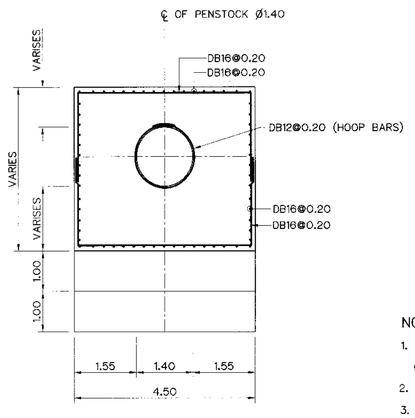

SECTION B–B
SCALE 1:75

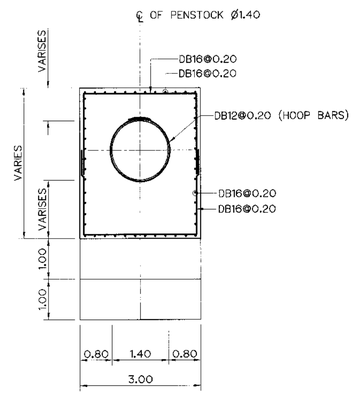

SECTION B–B
SCALE 1:75

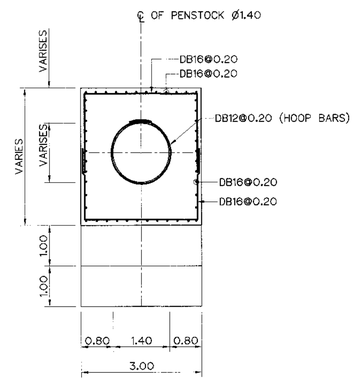

SECTION F–F
SCALE 1:75

NOTES :

1. ALL DIMENSIONS AND ELEVATIONS (M.S.L.) ARE IN METERS. UNLESS OTHERWISE SHOWN.
2. SYMBOLS, ABBREVIATIONS AND GENERAL NOTES SEE DWG. NO. KLP-GN-03
3. THE ALIGNMENT OF THE HEADRACE AND RELATED STRUCTURES SHALL BE CHECK AND CORRECTED BY THE CONTRACTOR TO SUIT THE FIELD CONDITIONS AND SHALL BE SUBMITTED TO DEDE'S FIELD ENGINEER FOR APPROVAL

REFERENCE DRAWINGS :

1. PENSTOCK PLAN AND PROFILE, STA. 0+000 TO STA. 0+693.571 KLP-PS-01 TO 02

0 1 2 3 4 5 6
SCALE 1:75 METERS

NO.	DATE	REVISIONS	CHECKED	APPROVED
3				
2				
1				
	CONSULTANTS		DEDE	

KINGDOM OF THAILAND
Department of Alternative Energy Development and Efficiency
MINISTRY OF ENERGY

KLONG LAM PLOK HYDROPOWER PROJECT

CIVIL WORKS AND TRANSMISSION LINE

PENSTOCK

THRUST BLOCK PLAN ,SECTIONS REINFORCEMENT DETAILS 2/5

P&C MANAGEMENT CO.,LTD.

Department of Alternative Energy Development and Efficiency
MINISTRY OF ENERGY

DESIGNED	นิธิ.29074	REVIEWED	
DRAWN		SUBMITTED	
CHECKED	นิธิ.6226	RECOMMENDED	
PROJECT MANAGER	08/03/2559 DATE	APPROVED	
DRAWING NO.	KLP-PS-04	SHEET NO.	62 OF 110

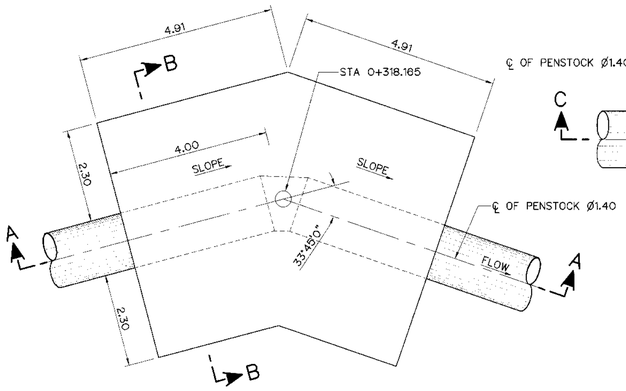

PLAN (THRUST BLOCK 8)
SCALE 1:75

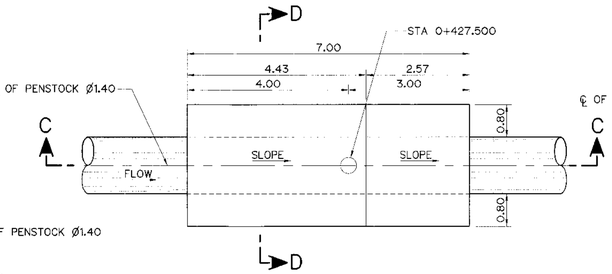

PLAN (THRUST BLOCK 9)
SCALE 1:75

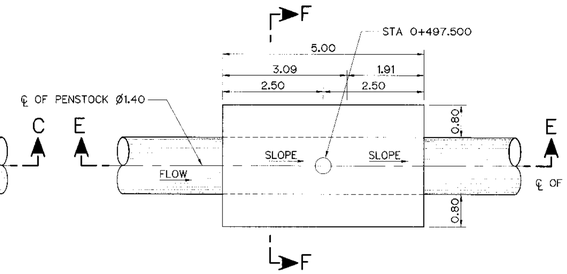

PLAN (THRUST BLOCK 10)
SCALE 1:75

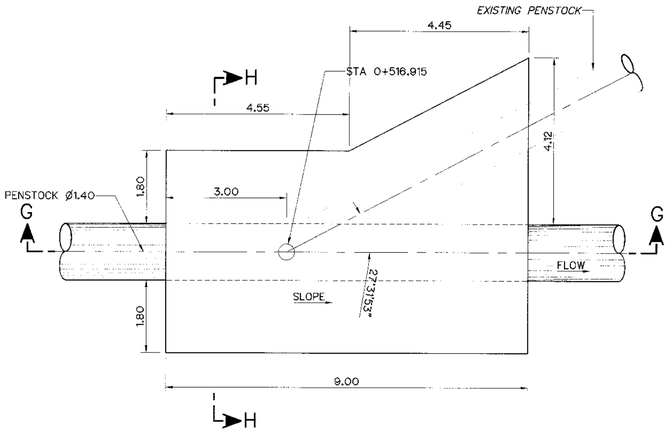

PLAN (THRUST BLOCK 11)
SCALE 1:75

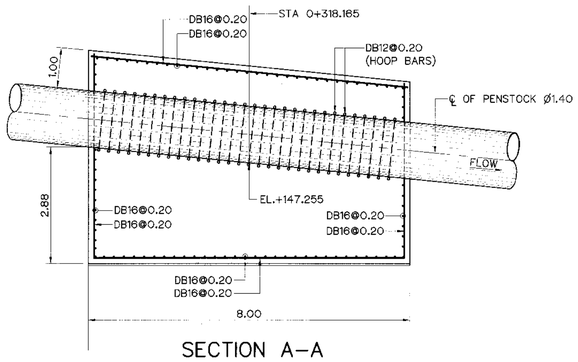

SECTION A–A
SCALE 1:75

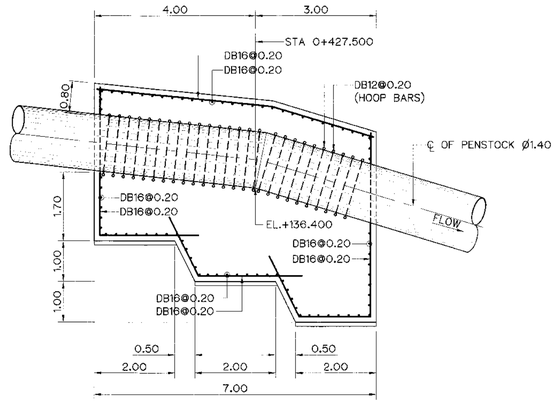

SECTION C–C
SCALE 1:75

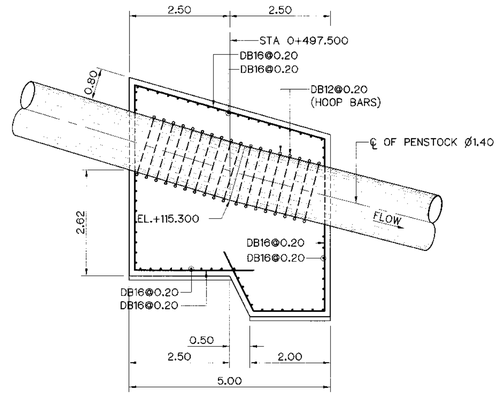

SECTION E–E
SCALE 1:75

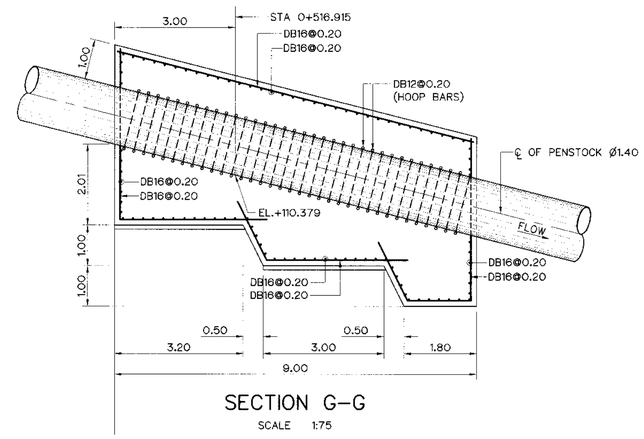

SECTION G–G
SCALE 1:75

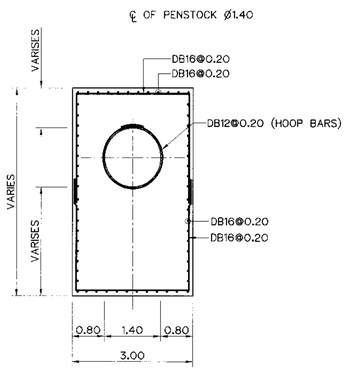

SECTION B–B
SCALE 1:75

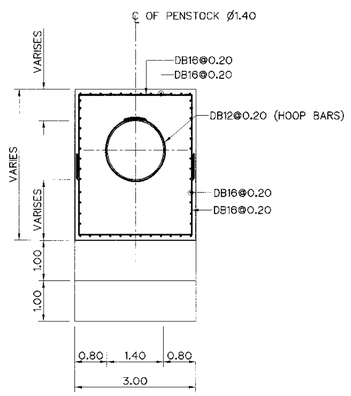

SECTION D–D
SCALE 1:75

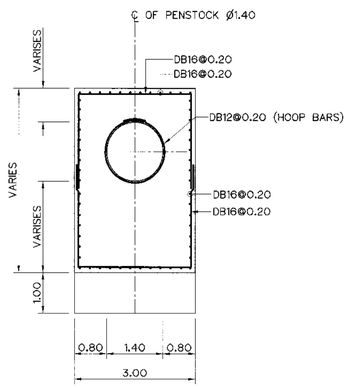

SECTION F–F
SCALE 1:75

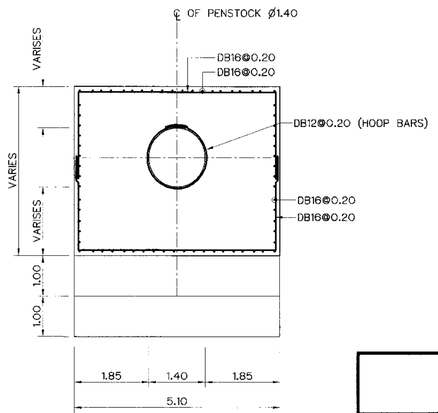

SECTION H–H
SCALE 1:75

NOTES :

1. ALL DIMENSIONS AND ELEVATIONS (M.S.L.) ARE IN METERS. UNLESS OTHERWISE SHOWN.
2. SYMBOLS, ABBREVIATIONS AND GENERAL NOTES SEE DWG. NO. KLP–GN–03
3. THE ALIGNMENT OF THE HEADRACE AND RELATED STRUCTURES SHALL BE CHECK AND CORRECTED BY THE CONTRACTOR TO SUIT THE FIELD CONDITIONS AND SHALL BE SUBMITTED TO DEDE'S FIELD ENGINEER FOR APPROVAL

REFERENCE DRAWINGS :

1. PENSTOCK PLAN AND PROFILE, STA. 0+500 TO STA. 0+693.571 KLP–PS–01 TO 02

0 1 2 3 4 5 6
SCALE 1:75 METERS

NO.	DATE	REVISIONS	CHECKED	APPROVED
3				
2				
1				

CONSULTANTS | DEDE

KINGDOM OF THAILAND
Department of Alternative Energy Development and Efficiency
MINISTRY OF ENERGY

KLONG LAM PLOK HYDROPOWER PROJECT

CIVIL WORKS AND TRANSMISSION LINE
PENSTOCK
THRUST BLOCK PLAN ,SECTIONS REINFORCEMENT DETAILS 3/5

P&C MANAGEMENT CO.,LTD.

Department of Alternative Energy Development and Efficiency
MINISTRY OF ENERGY

DESIGNED	ณัฐ.29074	ศิริ.6226	REVIEWED
DRAWN			SUBMITTED
CHECKED	ศิริ.6226		RECOMMENDED
PROJECT MANAGER	08/03/2559 DATE		APPROVED

DRAWING NO. KLP–PS–05
SHEET NO. 63 OF 110

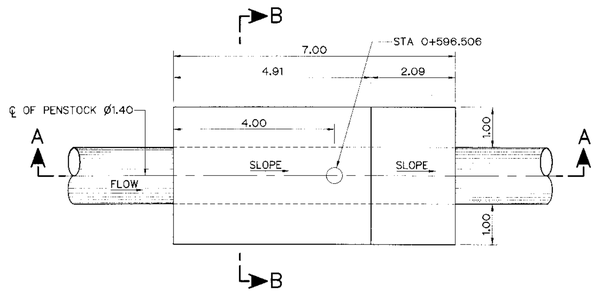

PLAN (THRUST BLOCK 12)
SCALE 1:75

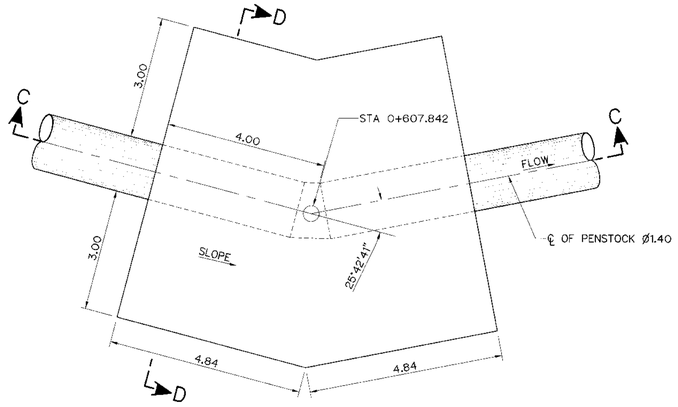

PLAN (THRUST BLOCK 13)
SCALE 1:75

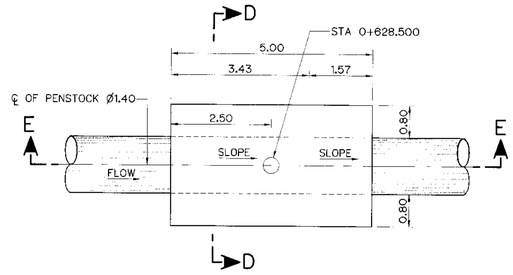

PLAN (THRUST BLOCK 14)
SCALE 1:75

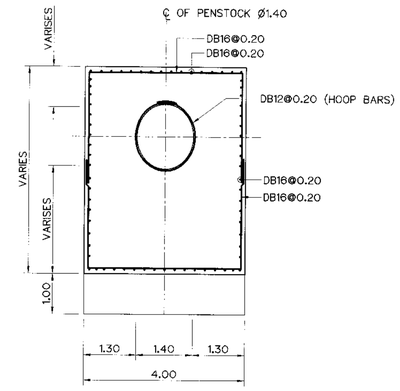

SECTION F–F
SCALE 1:75

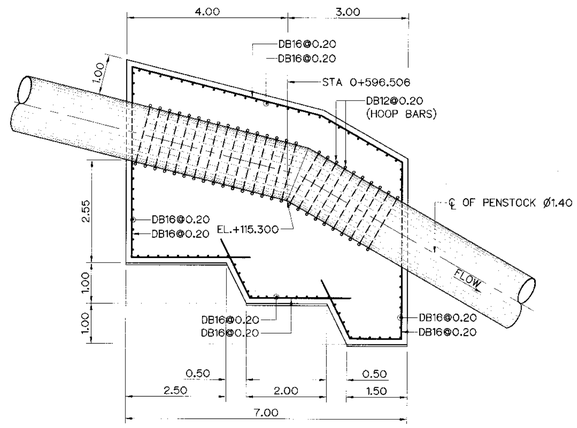

SECTION A–A
SCALE 1:75

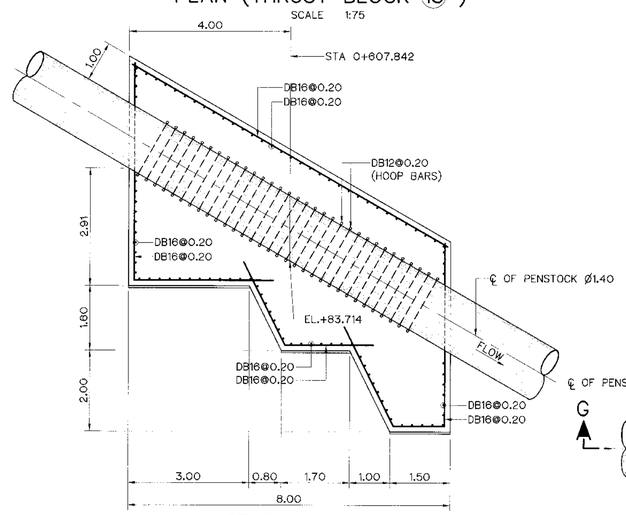

SECTION C–C
SCALE 1:75

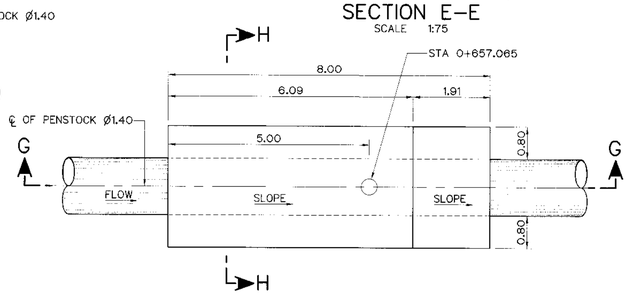

PLAN (THRUST BLOCK 15)
SCALE 1:75

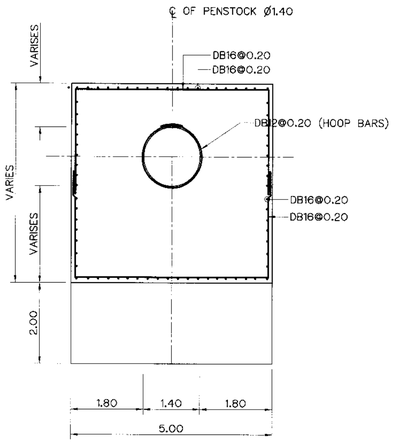

SECTION H–H
SCALE 1:75

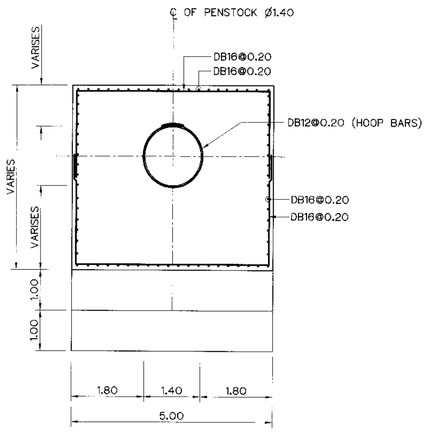

SECTION F–F
SCALE 1:75

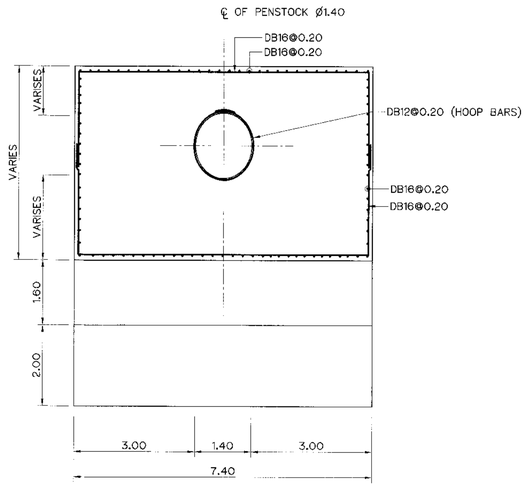

SECTION D–D
SCALE 1:75

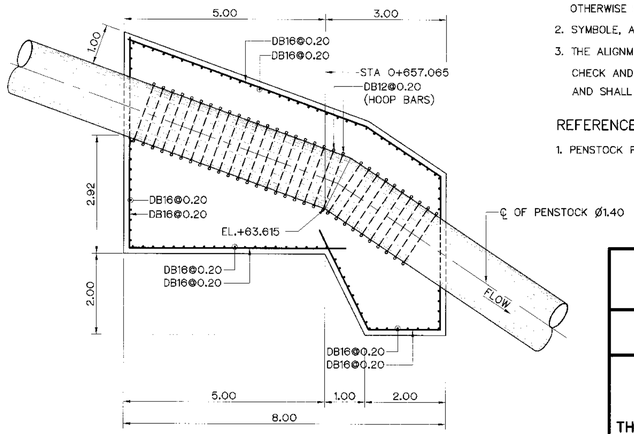

SECTION G–G
SCALE 1:75

NOTES :

1. ALL DIMENSIONS AND ELEVATIONS (M.S.L.) ARE IN METERS. UNLESS OTHERWISE SHOWN.
2. SYMBOLE, ABBREVIATIONS AND CENERAL NOTES SEE DWG. NO. KLP–GN–03
3. THE ALIGNMENT OF THE HEADRACE AND RELATED STRUCTURES SHALL BE CHECK AND CORRECTED BY THE CONTRACTOR TO SUIT THE FIELD CONDITIONS AND SHALL BE SUBMITTED TO DEDE'S FIELD ENGINEER FOR APPROVAL

REFERENCE DRAWINGS :

1. PENSTOCK PLAN AND PROFILE, STA. 0+500 TO STA. 0+693.571 KLP–PS–01 TO 02

0 1 2 3 4 5 6
SCALE 1:75 METERS

NO.	DATE	REVISIONS	CHECKED	APPROVED
3				
2				
1				

CONSULTANTS | DEDE

KINGDOM OF THAILAND
Department of Alternative Energy Development and Efficiency
MINISTRY OF ENERGY

KLONG LAM PLOK HYDROPOWER PROJECT

CIVIL WORKS AND TRANSMISSION LINE
PENSTOCK
THRUST BLOCK PLAN ,SECTIONS REINFORCEMENT DETAILS 4/5

P&C MANAGEMENT CO.,LTD.

Department of Alternative Energy Development and Efficiency
MINISTRY OF ENERGY

DESIGNED	สัณ.29074	REVIEWED	
DRAWN		SUBMITTED	
CHECKED	สัณ.6226	RECOMMENDED	
		APPROVED	

PROJECT MANAGER — 08/03/2559 DATE

DRAWING NO. KLP–PS–06

SHEET NO. 64 OF 110

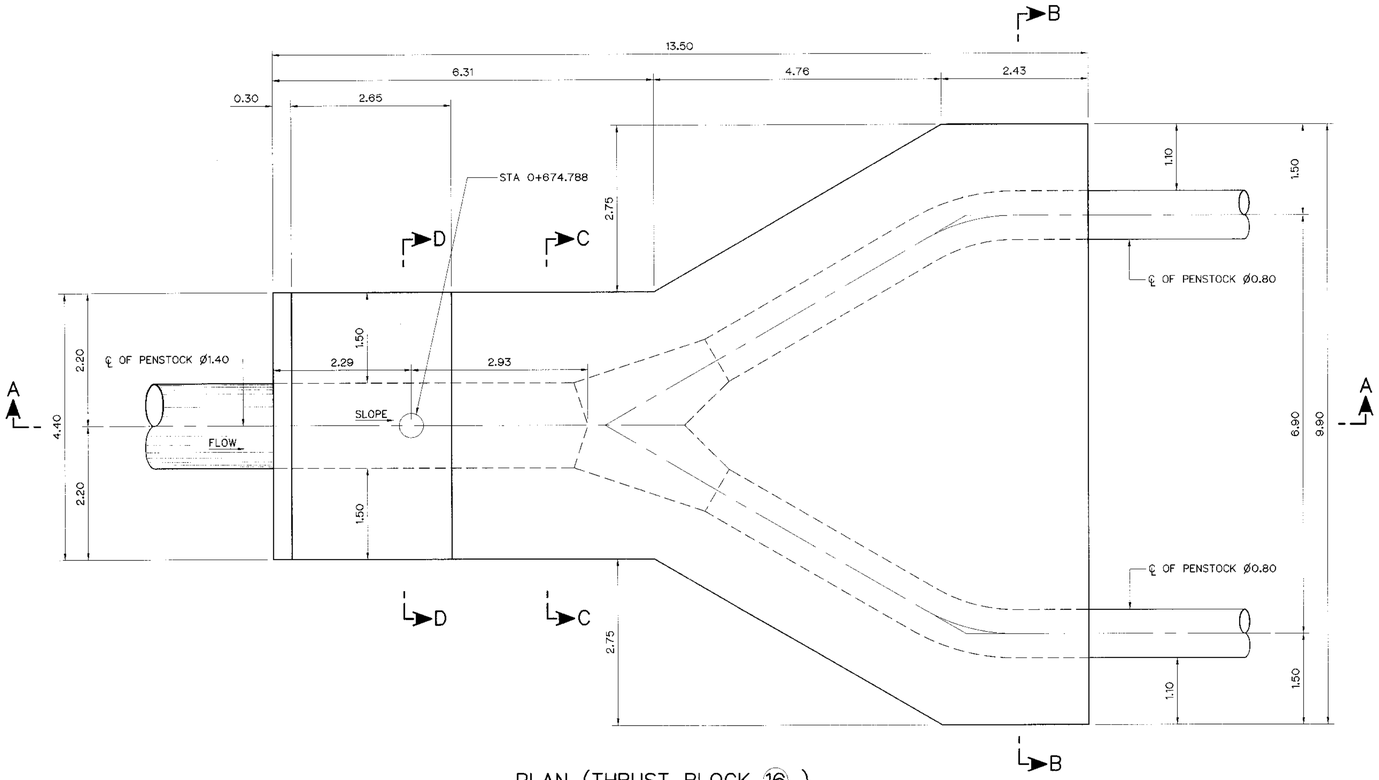

PLAN (THRUST BLOCK 16)
SCALE 1:50

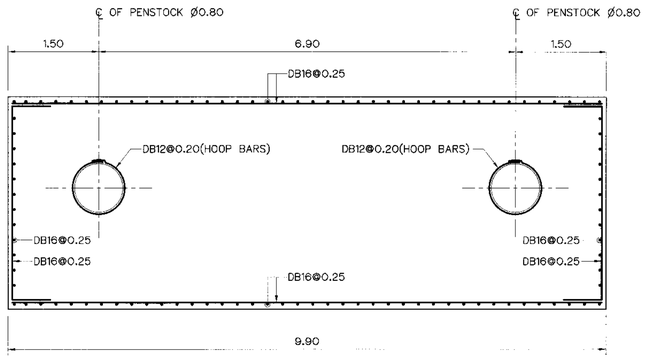

SECTION B–B
SCALE 1:50

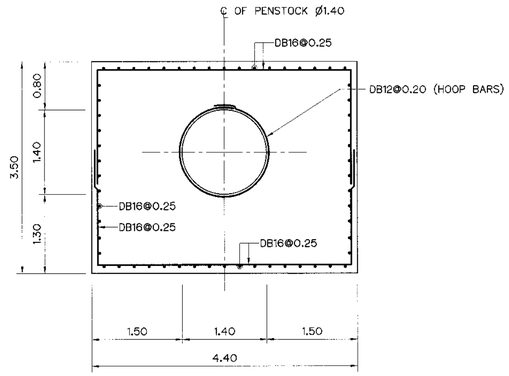

SECTION C–C
SCALE 1:50

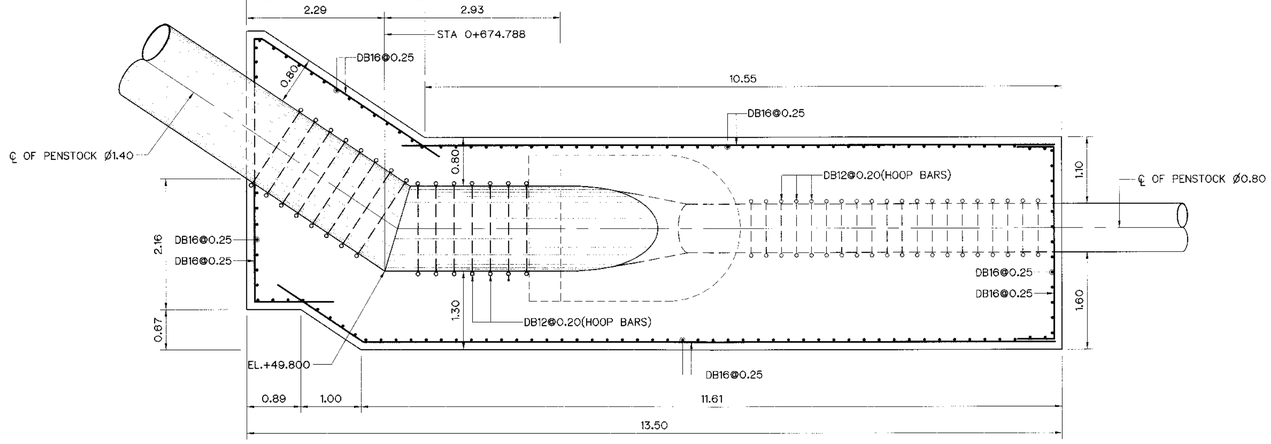

SECTION A–A
SCALE 1:50

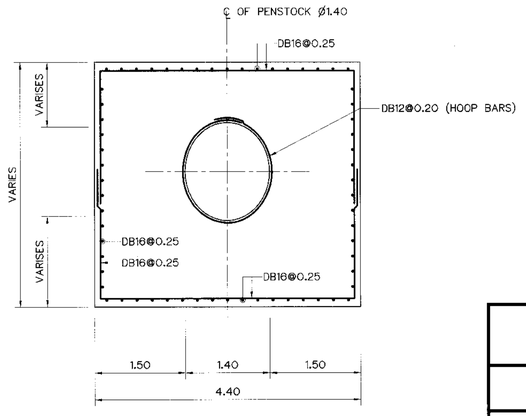

SECTION D–D
SCALE 1:50

0 0.5 1.0 2.0 3.0 4.0
SCALE 1:50 METERS

NOTES :

1. ALL DIMENSIONS AND ELEVATIONS (M.S.L.) ARE IN METERS. UNLESS OTHERWISE SHOWN.
2. SYMBOLS, ABBREVIATIONS AND GENERAL NOTES SEE DWG. NO. KLP-GN-03
3. THE ALIGNMENT OF THE HEADRACE AND RELATED STRUCTURES SHALL BE CHECK AND CORRECTED BY THE CONTRACTOR TO SUIT THE FIELD CONDITIONS AND SHALL BE SUBMITTED TO DEDE'S FIELD ENGINEER FOR APPROVAL

REFERENCE DRAWINGS :

1. PENSTOCK PLAN AND PROFILE, STA. 0+500 TO STA. 0+693.571 KLP-PS-01 TO 02

NO.	DATE	REVISIONS	CHECKED	APPROVED
3				
2				
1				
	CONSULTANTS		DEDE	

KINGDOM OF THAILAND
Department of Alternative Energy Development and Efficiency
MINISTRY OF ENERGY

KLONG LAM PLOK HYDROPOWER PROJECT

CIVIL WORKS AND TRANSMISSION LINE
PENSTOCK
THRUST BLOCK PLAN ,SECTIONS REINFORCEMENT DETAILS 5/5

P&C MANAGEMENT CO.,LTD.

Department of Alternative Energy Development and Efficiency
MINISTRY OF ENERGY

DESIGNED	วิศ.29074	วิศ.6226	REVIEWED
DRAWN			SUBMITTED
CHECKED		วิศ.6226	RECOMMENDED
PROJECT MANAGER		08/03/2559 DATE	APPROVED

DRAWING NO. KLP-PS-07
SHEET NO. 65 OF 110

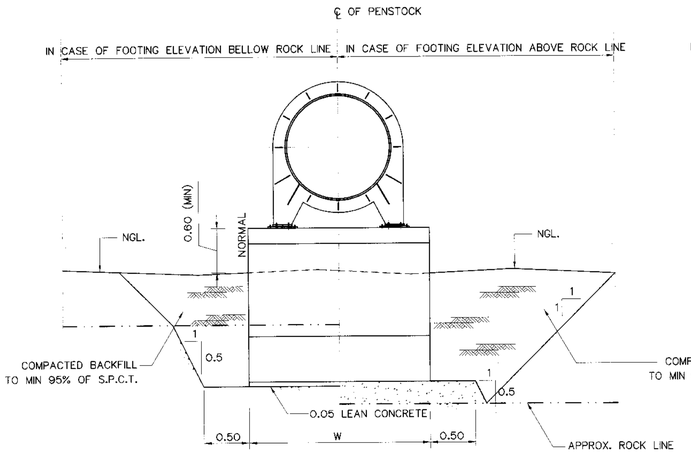

N.G.L. BELLOW INVERT ELEVATION

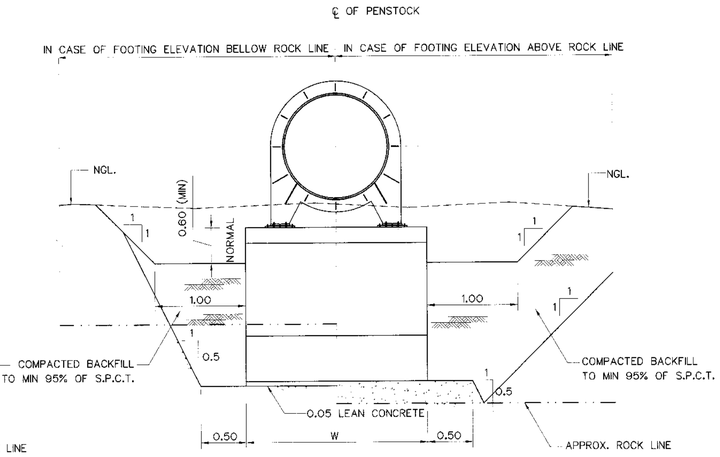

N.G.L. ABOVE INVERT ELEVATION

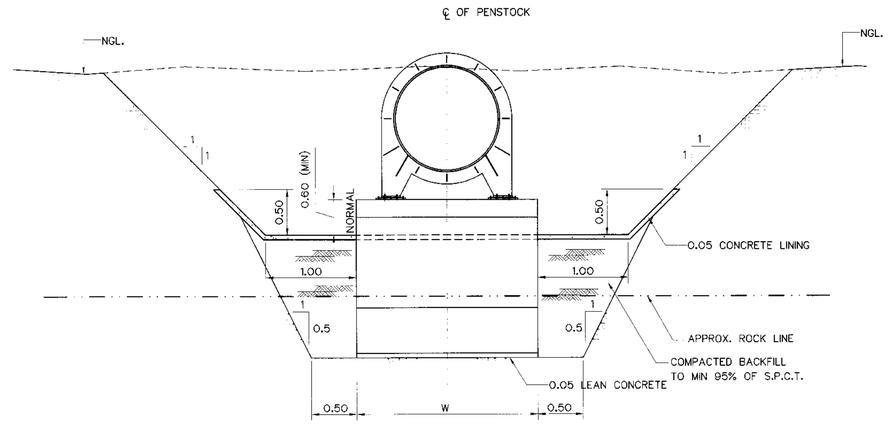

STA.0+657.065 TO 0+674.788

TYPICAL SECTION OF PENSTOCK

NOT TO SCALE

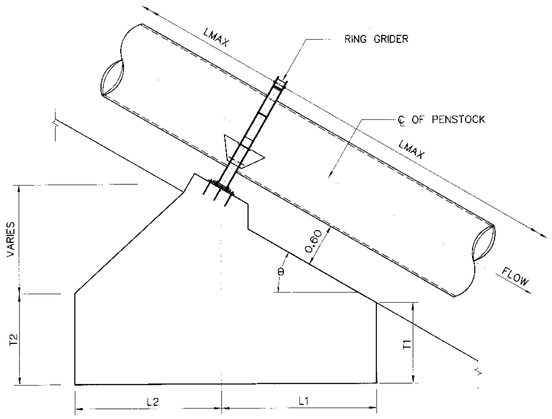

PIER TYPE 2

NOT TO SCALE

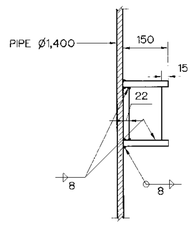

DETAIL "1"

SCALE 1:20

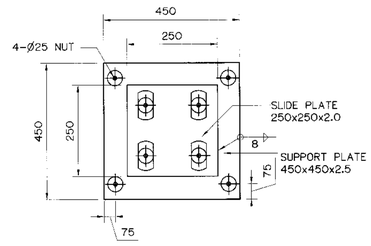

DETAIL "2"

SCALE 1:10

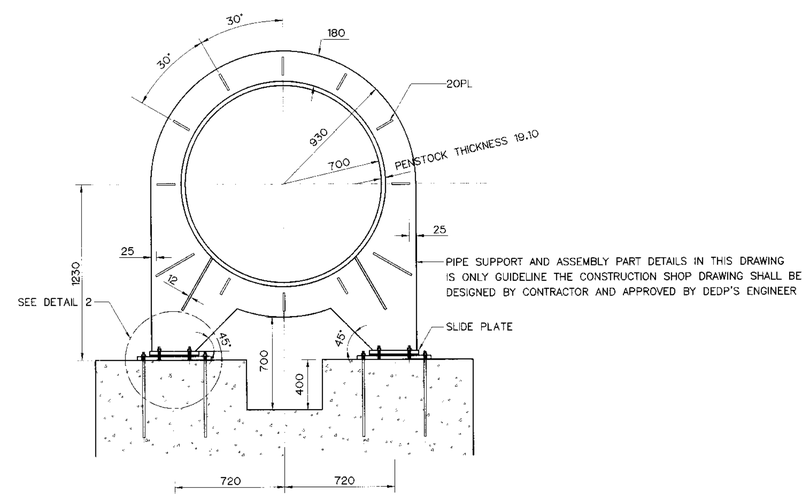

SECTION A – A

SCALE 1:20

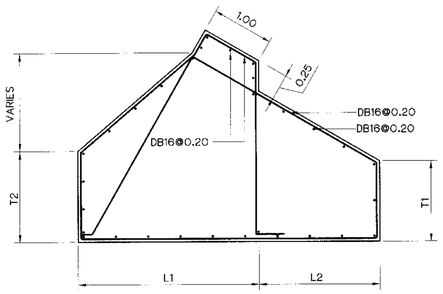

PIER (REINFORCEMENT DETAIL)

NOT TO SCALE

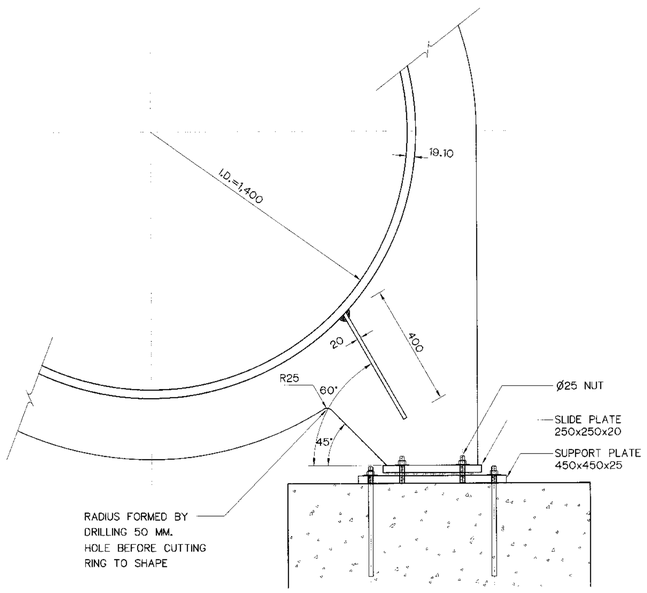

SECTION B – B

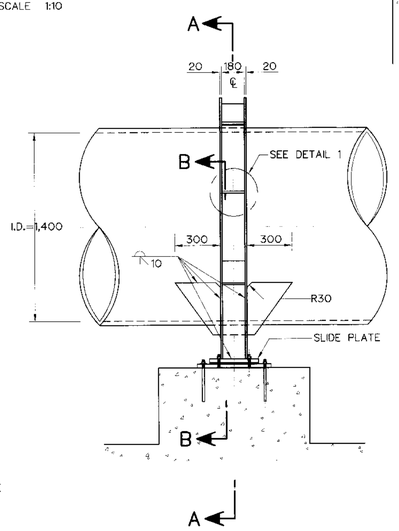

RING GIRDER FOR 1,400 I.D. PIPE

NOTES :

1. ALL DIMENSIONS ARE IN METERS, UNLESS OTHERWISE SHOWN.
2. SYMBOLS, ABBREVIATIONS AND GENERAL NOTES SEE DWG. NO.
3. CORROSIVE PROTECTION IS WARNED TO STRICTLY FLOW PAINTING SPECIFICATION
4. PIPE SUPPORT AND ASSEMBLY PART DETAILS IN THIS DRAWING IS ONLY GUIDELINE THE CONSTRUCTION SHOP DRAWING SHALL BE DESIGNED BY CONTRACTOR AND APPROVED BY DEDP'S ENGINEER

DIMENSIONS FOR PIER

STA.		SLOPE (θ)	L1	L2	T1	T2	W	LMAX
FROM	TO	DEGREE	(m.)	(m.)	(m.)	(m.)	(m.)	(m.)
0+060.000	0+102.500	16.88	2.00	1.00	1.50	1.00	3.00	8.00
0+102.500	0+125.263	7.76	2.00	1.00	1.00	1.00	3.00	8.00
0+125.263	0+213.500	14.08	2.00	1.00	1.50	1.00	3.00	8.00
0+213.500	0+267.500	20.51	2.50	1.50	1.50	1.50	4.00	8.00
0+267.500	0+287.500	26.79	2.50	1.50	1.50	1.50	4.00	8.00
0+287.500	0+427.500	5.67	2.00	1.00	1.00	1.00	3.00	8.00
0+427.500	0+497.500	16.77	2.00	1.00	1.50	1.00	3.00	8.00
0+497.500	0+596.500	14.23	2.00	1.00	1.50	1.00	3.00	8.00
0+610.147	0+628.500	29.76	2.50	1.50	1.50	1.50	4.00	8.00
0+628.500	0+657.065	19.80	2.50	1.50	1.50	1.50	4.00	8.00
0+657.065	0+674.788	33.69	2.50	1.50	1.50	1.50	4.00	8.00

0 0.5 1.0 1.5

SCALE 1:20 METERS

NO.	DATE	REVISIONS	CHECKED	APPROVED
3				
2				
1				

CONSULTANTS | DEDE

KINGDOM OF THAILAND
Department of Alternative Energy Development and Efficiency
MINISTRY OF ENERGY

KLONG LAM PLOK HYDROPOWER PROJECT

CIVIL WORKS AND TRANSMISSION LINE
PENSTOCK
PIPE SUPPORT SECTIONS AND DETAILS

P&C MANAGEMENT CO.,LTD.

Department of Alternative Energy Development and Efficiency
MINISTRY OF ENERGY

DESIGNED	REV.29074 REV.6226	REVIEWED	
DRAWN		SUBMITTED	
CHECKED	REV.6226	RECOMMENDED	
PROJECT MANAGER	08/03/2559 DATE	APPROVED	

DRAWING NO. KLP-PS-08

SHEET NO. 66 OF 110

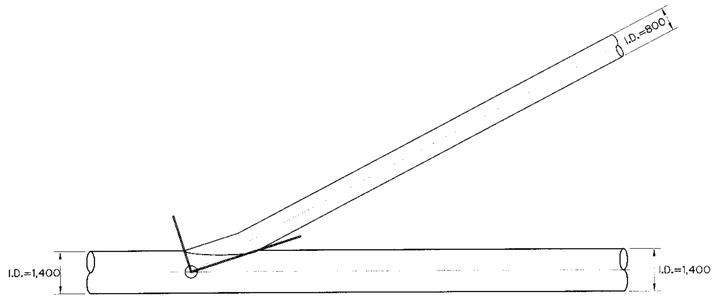

PLAN

SCALE 1:100

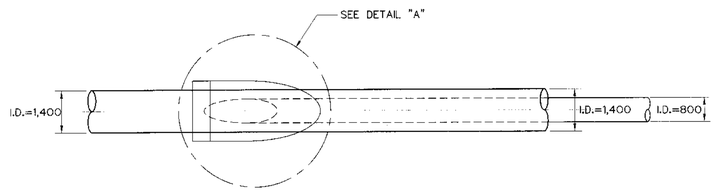

ELEVATION

SCALE 1:100

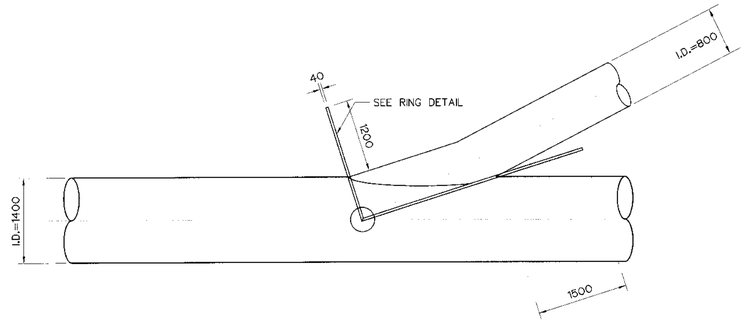

DETAIL "B"

SCALE 1:50

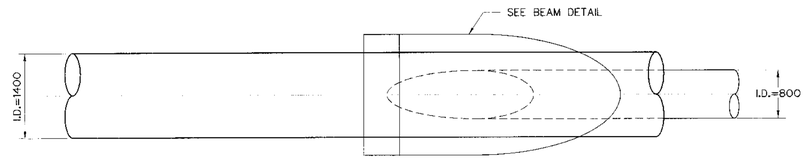

DETAIL "A"

SCALE 1:50

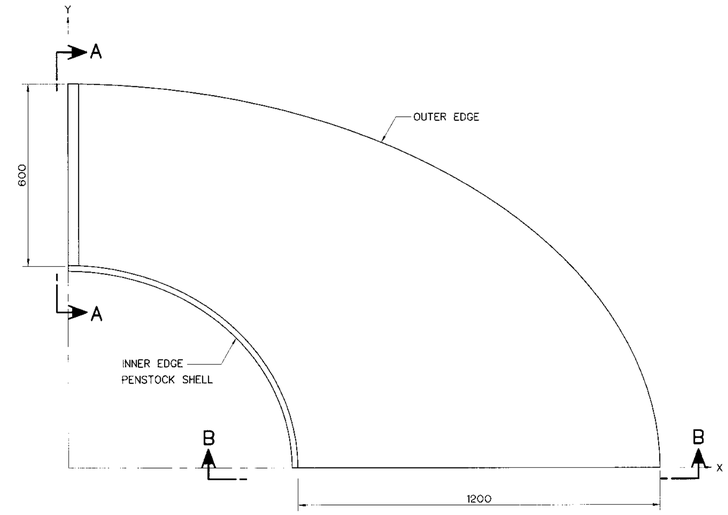

RING DETAIL

SCALE 1:10

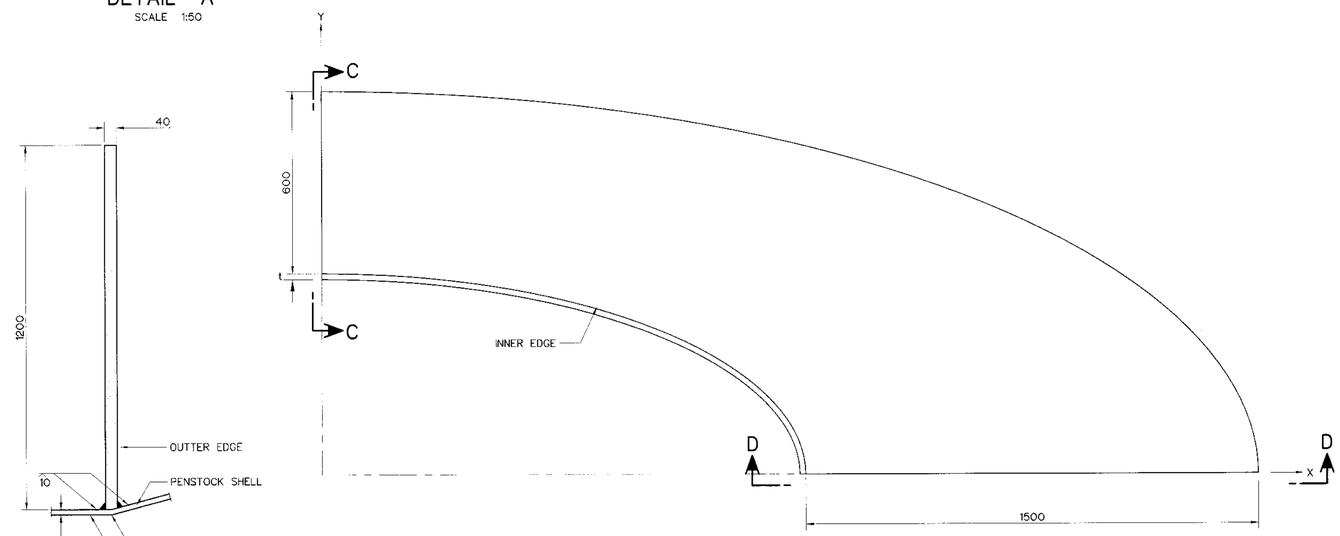

BEAM DETAIL

SCALE 1:10

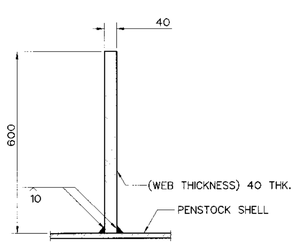

SECTION C–C

SCALE 1:10

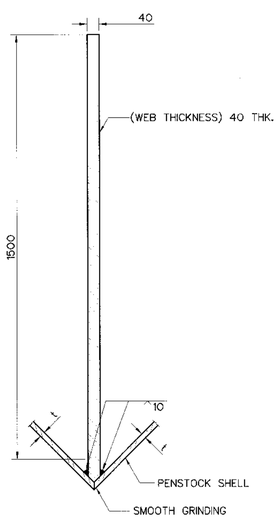

SECTION D–D

SCALE 1:10

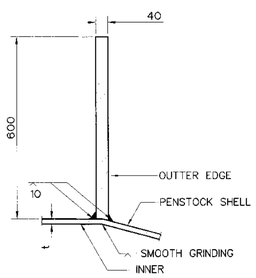

SECTION A–A

SCALE 1:10

SECTION B–B

SCALE 1:10

NOTES :

1. ALL DIMENSIONS ARE IN MILLIMETERS, UNLESS OTHERWISE SHOWN.
2. SYMBOLS, ABBREVIATIONS AND GENERAL NOTES SEE DWG. NO. KLP-GN-03
3. THIS DRAWING IS ONLY GUIDELINE THE CONSTRUCTION SHOP DRAWING SHALL BE DESIGNED BY CONTRACTOR AND APPROVED BY DEDP'S ENGINEER

0 0.1 0.2 0.3 0.4 0.5 0.6 0.7 0.8

SCALE 1:10 METERS

0 0.5 1.0 2.0 3.0 4.0

SCALE 1:50 METERS

0 1 2 3 4 5 6 7 8

SCALE 1:100 METERS

NO.	DATE	REVISIONS	CHECKED	APPROVED
3				
2				
1				
	CONSULTANTS		DEDE	

KINGDOM OF THAILAND
Department of Alternative Energy Development and Efficiency
MINISTRY OF ENERGY

KLONG LAM PLOK HYDROPOWER PROJECT

CIVIL WORKS AND TRANSMISSION LINE

PENSTOCK

WYE, PLAN, SECTIONS AND DETAILS AT STA.0+516.909

P&C MANAGEMENT CO.,LTD.

Department of Alternative Energy Development and Efficiency
MINISTRY OF ENERGY

DESIGNED	JBL29074	REVIEWED	
DRAWN		SUBMITTED	
CHECKED	BL6226	RECOMMENDED	
PROJECT MANAGER	08/03/2559 DATE	APPROVED	
DRAWING NO.	KLP-PS-09	SHEET NO.	67 OF 110

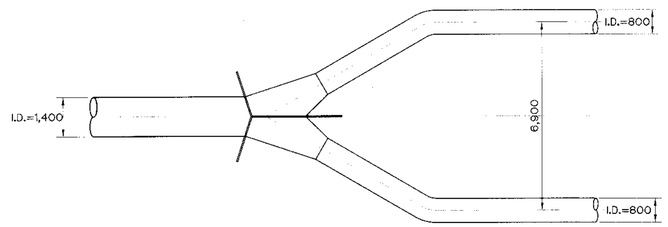

PLAN
SCALE 1:100

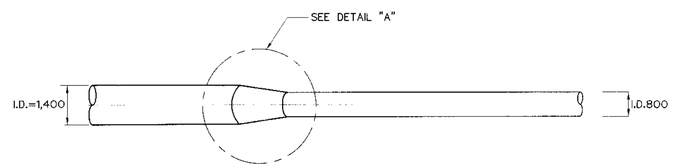

ELEVATION
SCALE 1:100

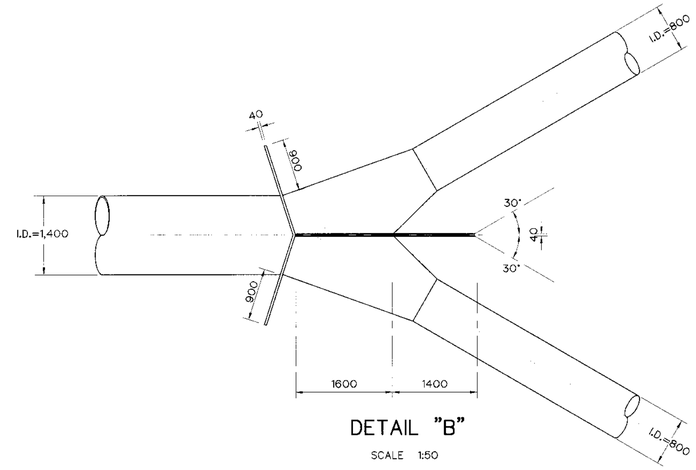

DETAIL "B"
SCALE 1:50

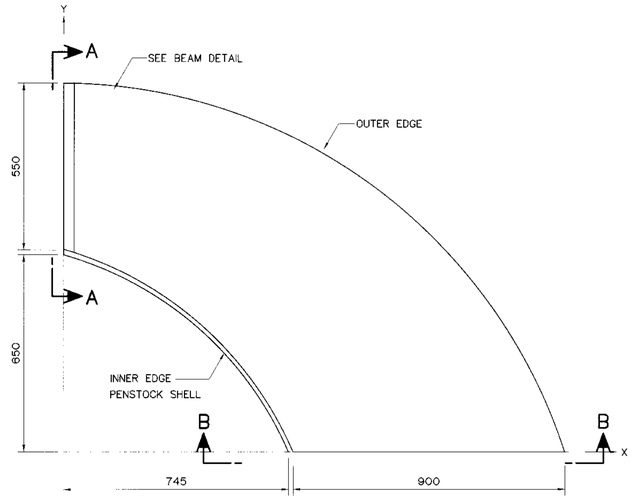

RING DETAIL
SCALE 1:10

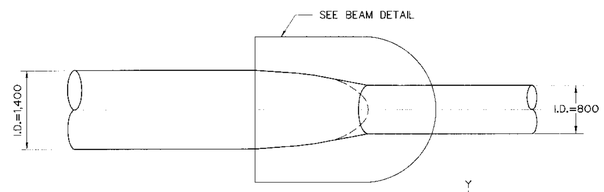

DETAIL "A"
SCALE 1:50

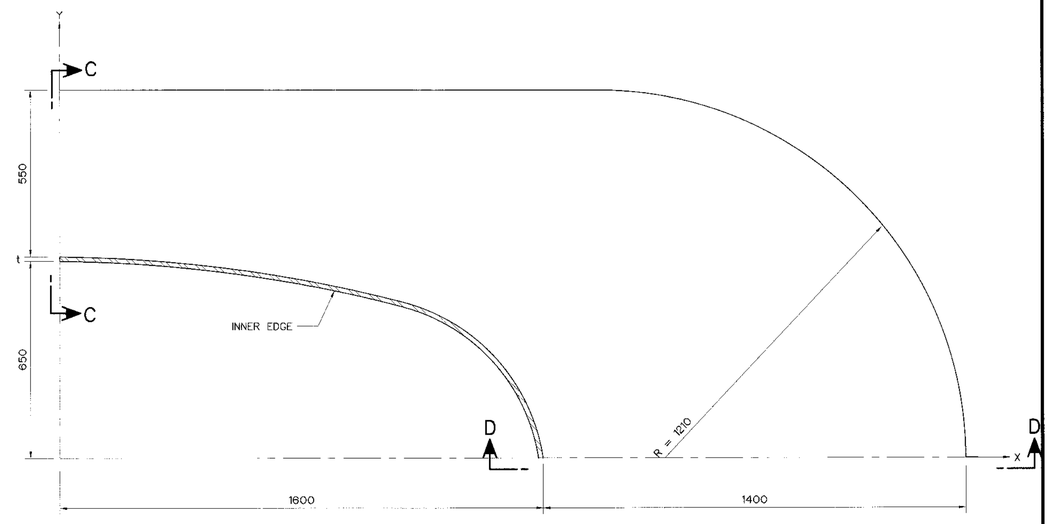

BEAM DETAIL
SCALE 1:10

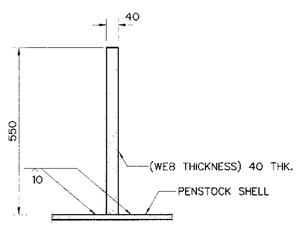

SECTION C–C
SCALE 1:10

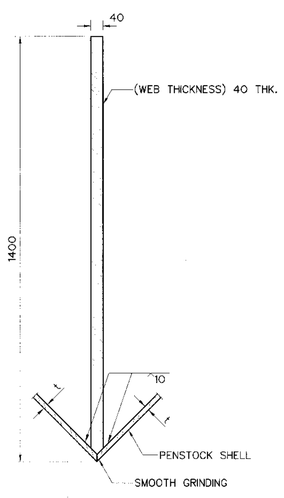

SECTION D–D
SCALE 1:10

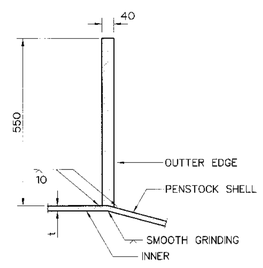

SECTION A–A
SCALE 1:10

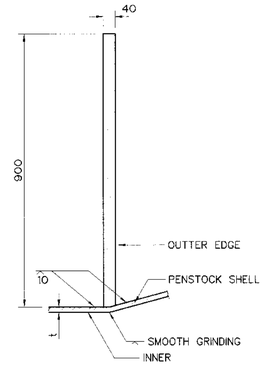

SECTION B–B
SCALE 1:10

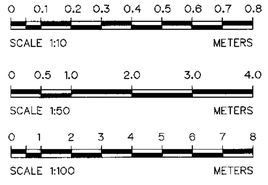

NOTES :

1. ALL DIMENSIONS ARE IN MILLIMETERS, UNLESS OTHERWISE SHOWN.
2. SYMBOLS, ABBREVIATIONS AND GENERAL NOTES SEE DWG. NO. KLP-GN-03
3. THIS DRAWING IS ONLY GUIDELINE THE CONSTRUCTION SHOP DRAWING SHALL BE DESIGNED BY CONTRACTOR AND APPROVED BY DEDP'S ENGINEER

NO.	DATE	REVISIONS	CHECKED	APPROVED
3				
2				
1				

CONSULTANTS | DEDE

KINGDOM OF THAILAND
Department of Alternative Energy Development and Efficiency
MINISTRY OF ENERGY

KLONG LAM PLOK HYDROPOWER PROJECT

CIVIL WORKS AND TRANSMISSION LINE
PENSTOCK
WYE, PLAN, SECTIONS AND DETAILS AT STA.0+678.000

P&C MANAGEMENT CO.,LTD.

DESIGNED	ณัฐ.29074	ณัฐ.6226
DRAWN		
CHECKED		ณัฐ.6226
PROJECT MANAGER		08/03/2559 DATE

Department of Alternative Energy Development and Efficiency
MINISTRY OF ENERGY

REVIEWED	
SUBMITTED	Chief
RECOMMENDED	
APPROVED	P. Hanuff

DRAWING NO. KLP-PS-10
SHEET NO. 68 OF 110

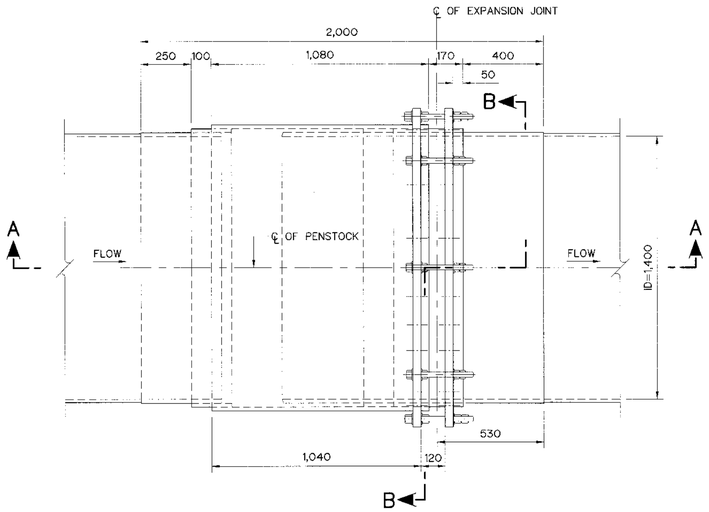

ELEVATION
SCALE 1:15

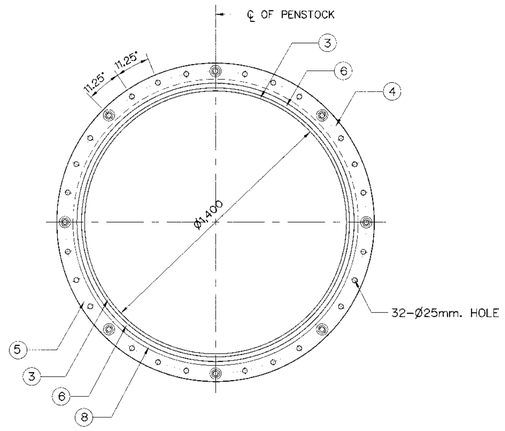

SECTION B-B
SCALE 1:15

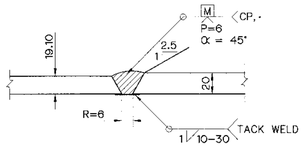

TRANSITION THICKNESS OF
BUTT JOINT IN PARTS OF
UNEQUAL THICKNESS

DETAIL "1"

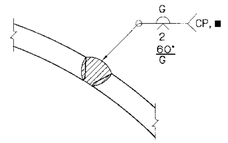

LONGITUDINAL WELD
DETAIL "2"

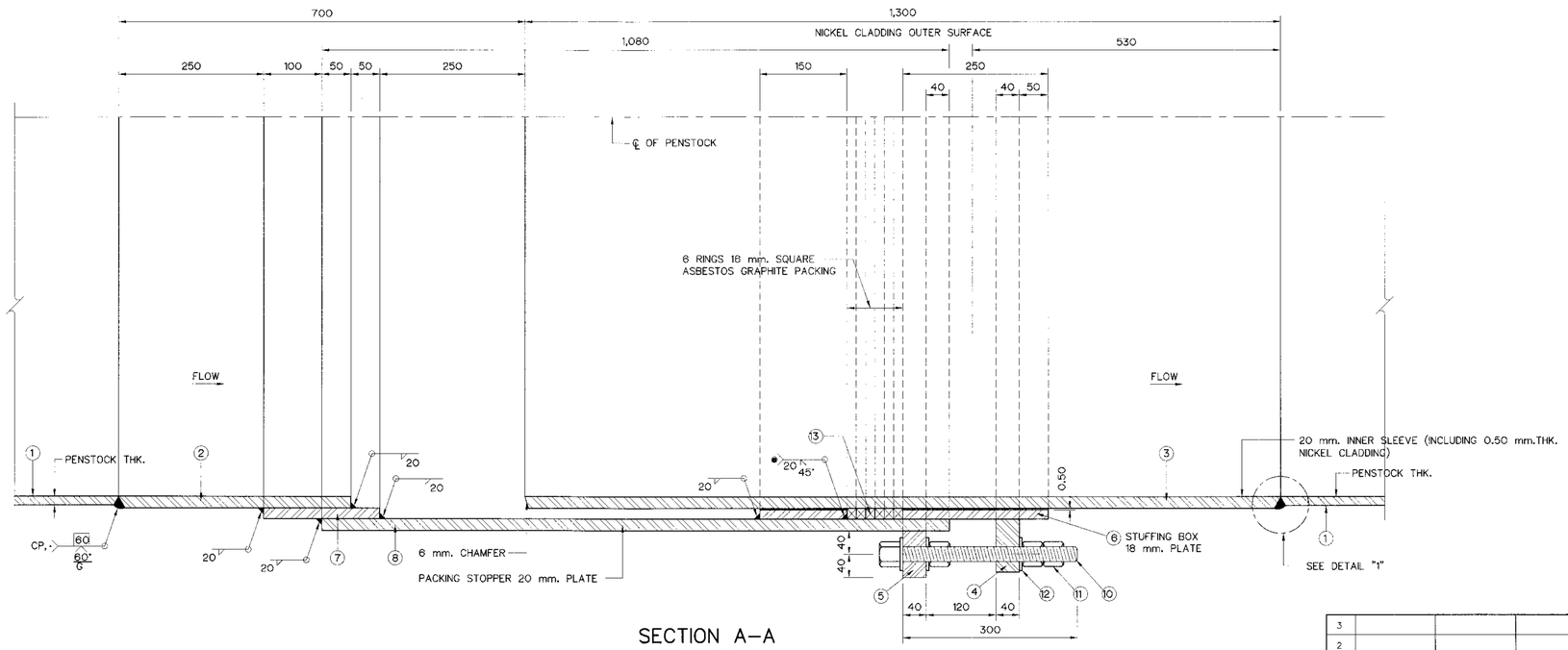

SECTION A-A
SCALE 1:5

TABLE OF DETAIL 1 SQUARE - GROOVE WELD , BUTT JOINT

ITEM	DESCRIPTION	MATERIAL	QUANT.	REMARKS
1.	PENSTOCK	ASTM A-283, GRADE D	-	--
2.	PENSTOCK	ASTM A-283, GRADE D	1	NOTE 2 & 3
3.	INNER SLEEVE	ASTM A-283, GRADE D	1	NOTE 2 & 4
4.	GRAND RING	ASTM A-283, GRADE D	1	SEAMLESS, NOTE 3
5.	OUTER RING	ASTM A-283, GRADE D	1	SEAMLESS, NOTE 3
6.	STUFFING BOX	ASTM A-283, GRADE D	1	NOTE 2 & 3
7.	DOUBLING PLATE	ASTM A-283, GRADE D	1	NOTE 2 & 3
8.	OUTER SLEEVE	ASTM A-283, GRADE D	1	NOTE 2 & 3
9.	PACKING STOPPER	ASTM A-283, GRADE D	1	NOTE 2 & 3
10.	Ø25 mm. BOLTS	ASTM A-325	32	--
11.	Ø25 mm. NUT	ASTM A-325	72	--
12.	Ø25 mm. WASHER	ASTM A-325	72	--
13.	PACKING RINGS (16 mm. S.Q. RING)	ASBESTOS-GRAPHITE	6	NOTE 5

NOTES :

1. THIS DRAWING IS NOT TO SCALE
2. LONGITUDINAL SEAMS HAVE TO BE COMPLETE JOINT PENETRATION WELDS BY COMBINING SINGLE-V-GROOVE WITH BACKING WELDS AND GROUND FLUSH WELDING WITH BASE MATAL AS REQUIRED (SEE DETAIL "2")
3. GALVANIZED ALL SURFACES WITH 0.10 mm. THK.
4. NICKEL CLADDING ON OUTER SURFACE WITH 0.50 mm. THK. AND GALVANIZED INNER SURFACE WITH 0.10 mm. THK.
5. EACH JOINT OF EACH PACKING RING SHALL BE MIN. 25 cm. APART DO NOT LINE UP JOINTS
6. ALL DIMENSION ARE IN MILIMETER UNLESS OTHERWISE SHOWN
7. THIS DRAWING IS ONLY GUIDELINE THE CONSTRUCTION SHOP DRAWING SHALL BE DESIGNED BY CONTRACTOR AND APPROVED BY DEDP'S ENGINEER

WELDING NOTATION :

CP = COMPLETE JOINT PENETRATION GROOVE WELD
G = GRINDING WELD DEPOSITE FLUSH WITH BASE METAL
• = BACKING PLATE SIZE 0.10x1.50 mm. AND SAME METERIAL AS PENSTOCK
● = BEVEL PLATE 9 mm. BEFORE ROLLING CHIP SQUARE AFTER WELDING
▲ = ROOT OPENING R = 2.0 mm.
ROOT FACE t = 3.0 mm.
GROOVE ANGLE = 45°
■ = ROOT OPENING R = 2.0 mm.
ROOT FACE t = 2.0 mm.
GROOVE ANGLE = 60°

0 0.05 0.1 0.2 0.3 0.4
SCALE 1:5 METERS
0 0.5 1.2
SCALE 1:15 METERS

KINGDOM OF THAILAND
Department of Alternative Energy Development and Efficiency
MINISTRY OF ENERGY

KLONG LAM PLOK HYDROPOWER PROJECT

CIVIL WORKS AND TRANSMISSION LINE
PENSTOCK
EXPANSION JOINT, PLAN, SECTIONS AND DETAILS

NO.	DATE	REVISIONS	CHECKED	APPROVED
3				
2				
1				

CONSULTANTS | DEDE

P&C MANAGEMENT CO.,LTD.
DESIGNED นิติ.29074 วิศ.6226
DRAWN
CHECKED วิศ.6226
PROJECT MANAGER 08/03/2559 DATE

Department of Alternative Energy Development and Efficiency
MINISTRY OF ENERGY
REVIEWED
SUBMITTED
RECOMMENDED
APPROVED

DRAWING NO. KLP-PS-11
SHEET NO. 69 OF 110

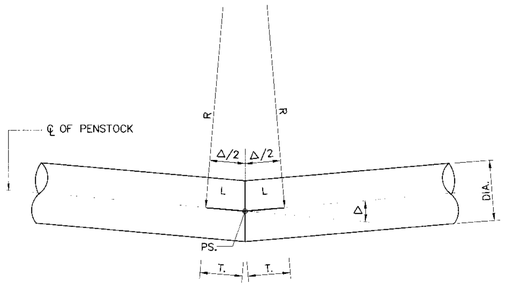

BEND TYPE "1"

DELTA(Δ) 0°-5°

SCALE 1:20

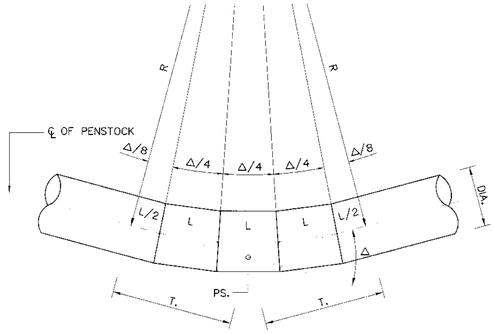

BEND TYPE "4"

DELTA(Δ) 25°-35°

SCALE 1:20

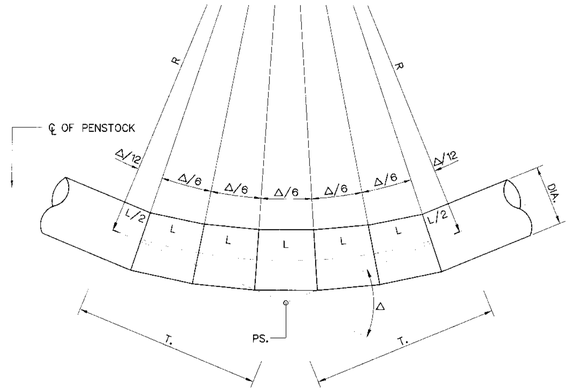

BEND TYPE "6"

DELTA(Δ) 55°-OVER

SCALE 1:20

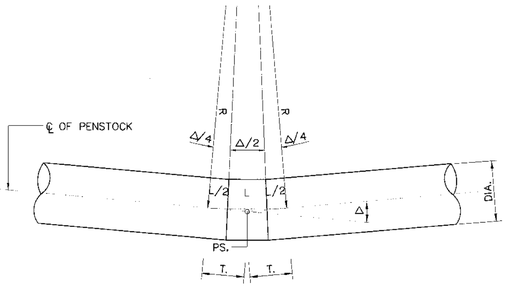

BEND TYPE "2"

DELTA(Δ) 5°-15°

SCALE 1:20

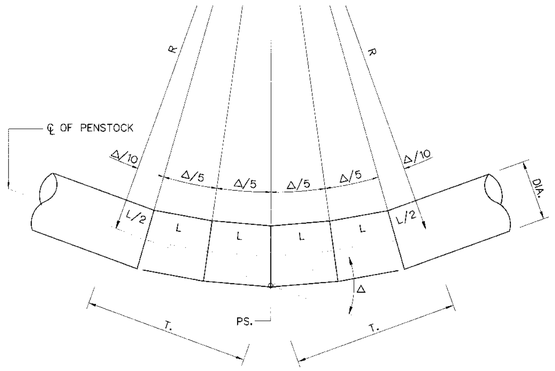

BEND TYPE "5"

DELTA(Δ) 35°-45°

SCALE 1:20

D	TEE		ELBOW							
			2-PIECE θ = 11.25°		3-PIECE θ = 22.25°		4-PIECE θ = 45°		5-PIECE θ = 45°	
	Run J+J	Outlet J	M	a	N	b	P	c	Q	d
150	800	400	100	250	175	225	275	225	375	250
200	850	425	100	250	200	225	300	225	450	250
250	900	450	100	250	225	200	350	225	500	250
300	1400	700	125	275	250	275	400	275	575	300
400	1600	800	150	350	300	325	500	325	700	350
500	1750	875	175	350	350	325	550	325	825	350
600	2000	1000	200	350	400	350	650	350	650	350
700	2250	1125	225	400	450	400	725	400	950	375
800	2500	1250	225	475	500	450	800	450	1075	425
900	2600	1300	250	450	525	450	850	425	1175	475
1,000	2850	1425	250	525	550	500	875	500	1250	450
1,200	2850	1425	275	400	575	400	950	375	1300	525
1,500	3400	1700	300	475	675	475	1050	450	1375	400
1,800	3800	1900	325	450	700	425	1150	425	1575	550

NOTE :

1. SYMBOLS, ABBREVIATIONS AND GENERAL NOTES SEE DWG. NO. KLP-GN-03

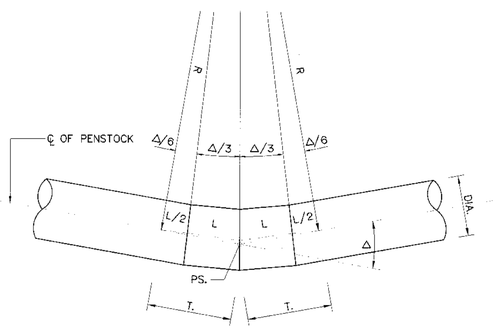

BEND TYPE "3"

DELTA(Δ) 15°-25°

SCALE 1:20

0 0.5 1.0 1.5

SCALE 1:20 METERS

NO.	DATE	REVISIONS	CHECKED	APPROVED
3				
2				
1				

CONSULTANTS DEDE

KINGDOM OF THAILAND
Department of Alternative Energy Development and Efficiency
MINISTRY OF ENERGY

KLONG LAM PLOK HYDROPOWER PROJECT

CIVIL WORKS AND TRANSMISSION LINE
PENSTOCK
BEND DETAILS

P&C MANAGEMENT CO.,LTD.

Department of Alternative Energy Development and Efficiency
MINISTRY OF ENERGY

REVIEWED
SUBMITTED
RECOMMENDED
APPROVED

DESIGNED 28.29074 28.6226
DRAWN
CHECKED 28.6226

PROJECT MANAGER 08/03/2559 DATE

DRAWING NO. KLP-PS-12

SHEET NO. 70 OF 110

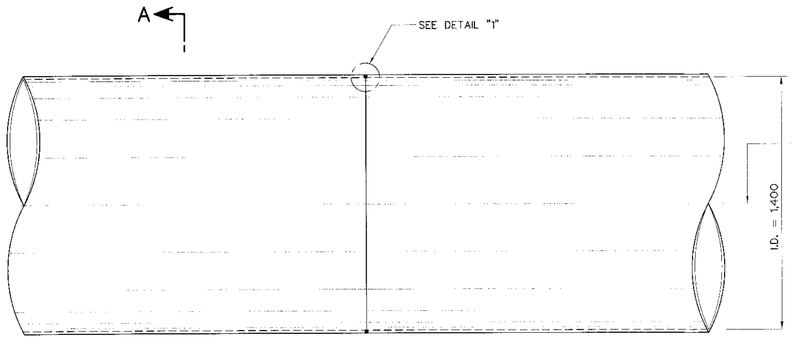

ELEVATION

NOT TO SCALE

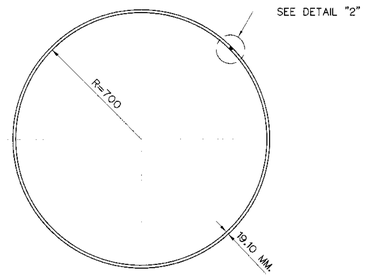

SECTION A–A

NOT TO SCALE

TABLE OF DETAIL "1" SQUARE–GROOVE WELD, BUTT JOINT

WELDING PROCESS	DESIGNATION	BASE METAL THICKNESS		GROOVE PREPARATION		TOLERANCES		REMARKS
		T1	T3	ROOT OPENING	GROOVE ANGLE	ROOT OPENING	GROOVE ANGLE	
SMAW	B–L1a	19.10	1.0	R = T1	–	+1.5,–0	–	SINGLE–PASS WELD
GMAW FCAW	B–L1a–GF	19.10	1.0	R = T	–	+1.5,–0	–	SINGLE–PASS WELD

SMAW = SHIELD METAL ARC WELDING

GMAW = GAS METAL ARC WELDING

FCAW = FLUX CORED ARC WELDING

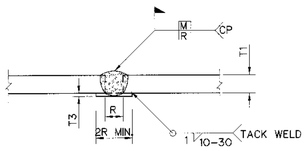

CIRCULAR BUTT JOINT

DETAIL "1"

TABLE OF DETAIL "2" SINGLE–V–GROOVE WELD, BUTT JOINT

TYPE	WELDING PROCESS	DESIGNATION	BASE METAL THICKNESS		GROOVE PREPARATION			TOLERANCES			REMARKS
			T1	T3	ROOT OPENING	GROOVE ANGLE	ROOT FACE	R	A	F	
A	SMAW	B–U2	19.10	–	R = 2.0	A = 60°	F = 1.5	+15,–0	+10°,–0°	+15,–0	SINGLE–PASS WELD
	SMAW	B–U2	19.10	–	R = 2.0	A = 60°	F = 2.0	+15,–0	+10°,–0°	+15,–0	SINGLE–PASS WELD
B	SMAW	B–L1a–GF	19.10	1.0	R = 6.0	–	–	+15,–0	–	–	SINGLE–PASS WELD
	GMAW FCAW	B–L1a–GF	19.10	1.0	R = 9.0	–	–	+15,–0	–	–	SINGLE–PASS WELD

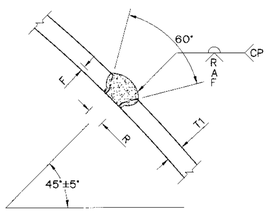

LONGITUDINAL BUTT JOINT

TYPE "A"

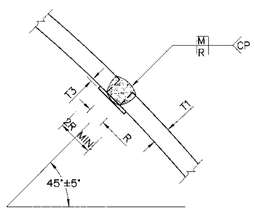

LONGITUDINAL BUTT JOINT (ALTERNATIVE)

TYPE "B"

DETAIL "2"

NOTES :

1. ALL DIMENSION ARE IN MILLIMETER, UNLESS OTHERWISE SHOWN.
2. SYMBOLS, ABBREVIATIONS AND GENERAL NOTES SEE DWG. NO. KLP–GN–03
3. GROOVE WELD MADE AFTER WELDING OTHER SIDE
4. USE WELDING ELECTRODE TYPE "E" 70
5. MATERIAL OF BACKING IS THE SAME AS OF PIPE
6. THIS DRAWING IS ONLY GUIDELINE THE CONSTRUCTION SHOP DRAWING SHALL BE DESIGNED BY CONTRACTOR AND APPROVED BY DEDP'S ENGINEER

WELDING SYMBOLS

		R	R A F	M	CP	S L–P				
FIELDWELD SYMBOL	WELD – ALL – AROUND SYMBOL	SQUARE GROOVE WELDING SYMBOL R=ROOT OPENING	V–GROOVE WELDING SYMBOL R=ROOT OPENING A=GROOVE ANGLE F=ROOT FACE	BACKING SYMBOL (MATERIAL OF BACKING THE SAME AS OF PIPE)	COMPLETE JOINT PENETRATION WELD	FILLET WELD S=WELDING SIZE L=LENGTH OF WELD P=PITCH (CENTER TO CENTER OF WELD)	BACK OR BACKING WELD SYMBOL	COMBINED WELDS. BACKING WELD ON FAR SIDE AND V–GROOVE WELD ON NEAR SIDE	BEVEL GROOVE WELDING SYMBOL	FLARE–BEVEL GROOVE WELDING SYMBOL

NO.	DATE	REVISIONS	CHECKED	APPROVED
3				
2				
1				
	CONSULTANTS		DEDE	

KINGDOM OF THAILAND
Department of Alternative Energy Development and Efficiency
MINISTRY OF ENERGY

KLONG LAM PLOK HYDROPOWER PROJECT

CIVIL WORKS AND TRANSMISSION LINE

PENSTOCK

WELDING DETAILS

P&C MANAGEMENT CO.,LTD.

Department of Alternative Energy Development and Efficiency MINISTRY OF ENERGY

REVIEWED

DESIGNED 28.29074 28.6226

SUBMITTED

DRAWN

RECOMMENDED

CHECKED 28.6226

APPROVED

PROJECT MANAGER 08/03/2559 DATE

DRAWING NO. KLP–PS–13

SHEET NO. 71 OF 110

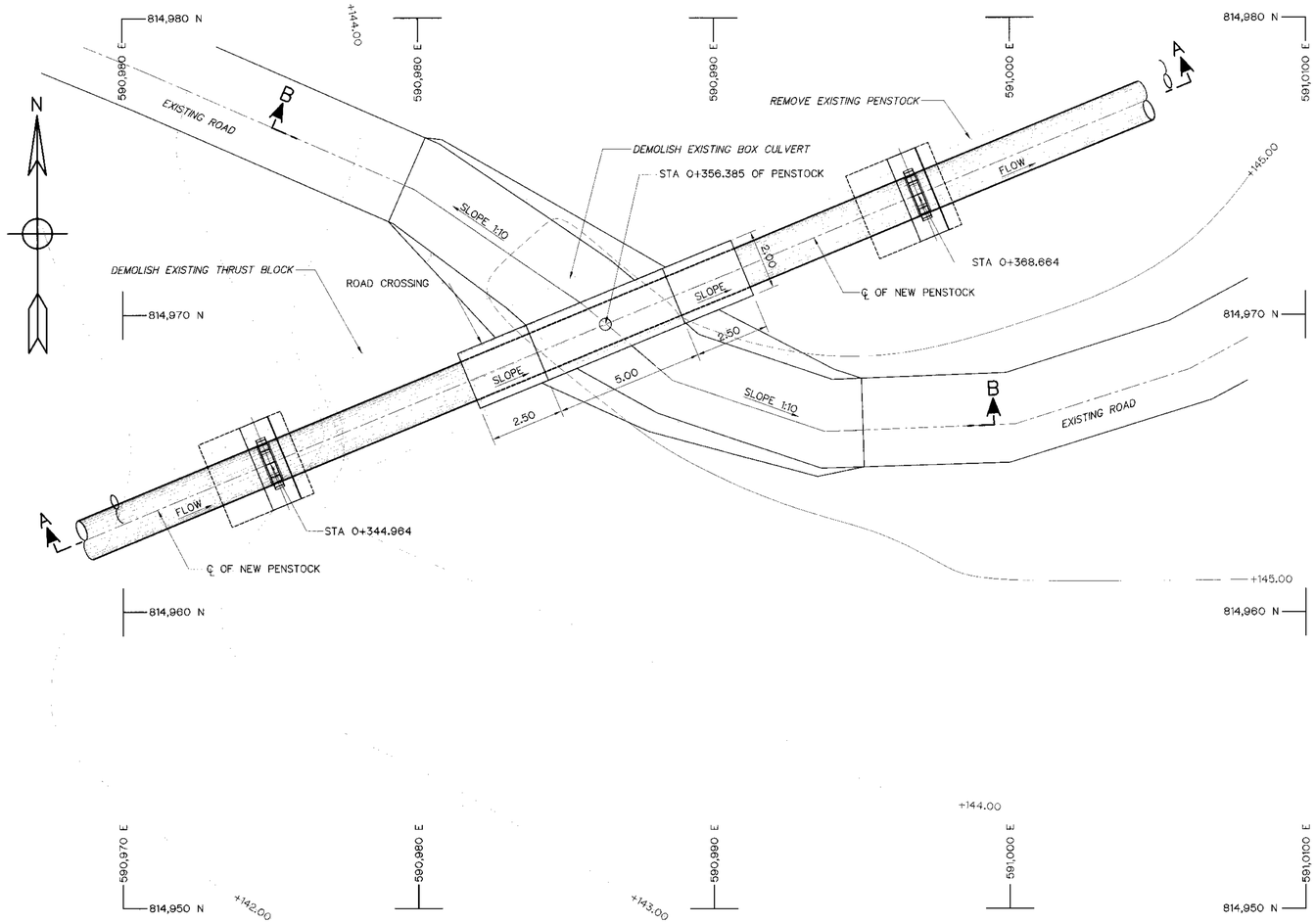

PLAN
SCALE 1:100

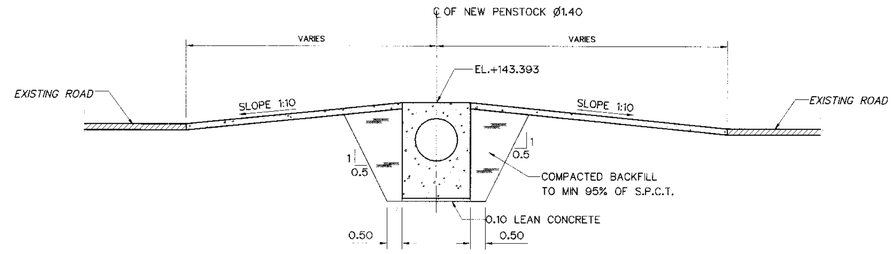

SECTION B–B
SCALE 1:100

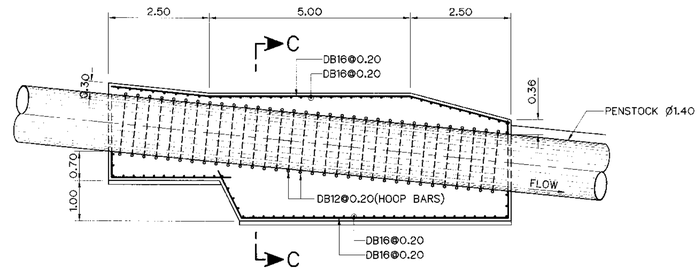

SECTION A–A (REINFORCEMENT)
SCALE 1:75

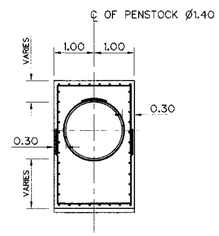

SECTION C–C
SCALE 1:75

NOTES :

1. ALL DIMENSIONS AND ELEVATIONS (M.S.L.) ARE IN METERS. UNLESS OTHERWISE SHOWN.
2. SYMBOLS, ABBREVIATIONS AND GENERAL NOTES SEE DWG. NO. KLP–GN–03
3. THE ALIGNMENT OF THE HEADRACE AND RELATED STRUCTURES SHALL BE CHECK AND CORRECTED BY THE CONTRACTOR TO SUIT THE FIELD CONDITIONS AND SHALL BE SUBMITTED TO DEDE'S FIELD ENGINEER FOR APPROVAL

REFERENCE DRAWINGS :

1. PENSTOCK PLAN AND PROFILE, STA. 0+000 TO STA. 0+500 — KLP–PS–01
2. PENSTOCK PIPE SUPPORT SECTIONS AND DETAILS — KLP–PS–08

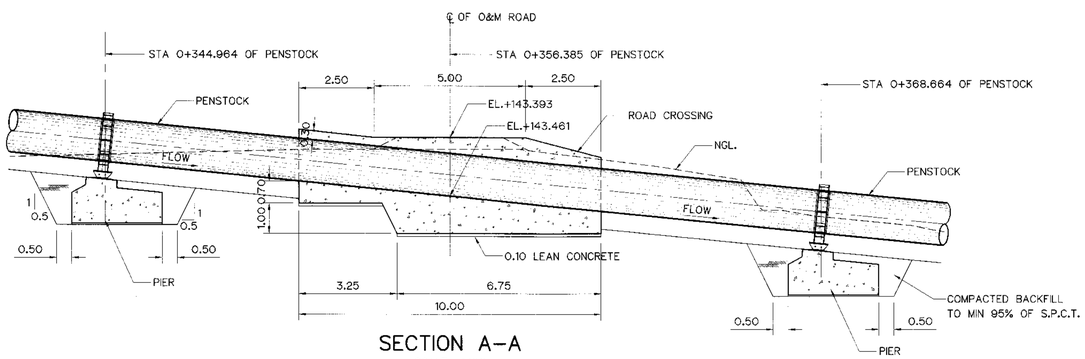

SECTION A–A
SCALE 1:100

0 1 2 3 4 5 6
SCALE 1:75 METERS

0 1.0 2.0 4.0 6.0 8.0
SCALE 1:100 METERS

NO.	DATE	REVISIONS	CHECKED	APPROVED
3				
2				
1				

CONSULTANTS — DEDE

KINGDOM OF THAILAND
Department of Alternative Energy Development and Efficiency
MINISTRY OF ENERGY

KLONG LAM PLOK HYDROPOWER PROJECT

CIVIL WORKS AND TRANSMISSION LINE
PENSTOCK
ROAD CROSSING
STA 0+356.385 PLAN, SECTIONS REINFORCEMENT

P&C MANAGEMENT CO.,LTD.

Department of Alternative Energy Development and Efficiency
MINISTRY OF ENERGY

DESIGNED	สิริ.29074	ช.ร. สิริ.6226	REVIEWED
DRAWN			SUBMITTED
CHECKED	ช.ร. สิริ.6226		RECOMMENDED
PROJECT MANAGER	08/03/2559 DATE		APPROVED

DRAWING NO. KLP–PS–14
SHEET NO. 72 OF 110

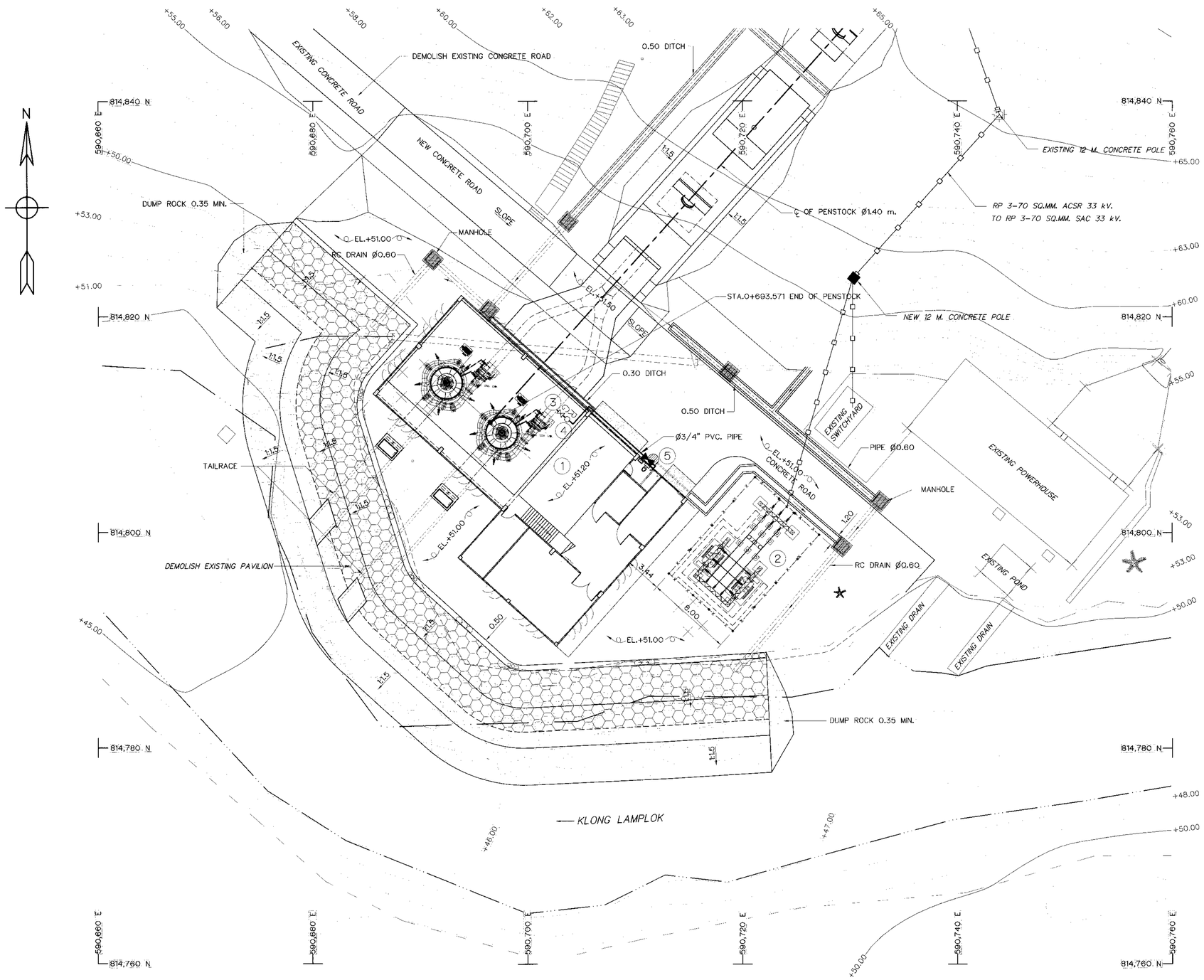

GENERAL LAY-OUT

SCALE 1:200

LISTS :

1. POWER HOUSE
2. SWITCHYARD
3. GATE VALVE Ø3/4"
4. PRESSURE REDUCING VALVE
5. SEPTICK TANK

NOTES :

1. ALL DIMENSIONS AND ELEVATIONS (M.S.L.) ARE IN METERS, UNLESS OTHERWISE SHOWN.
2. SYMBOLS, ABBREVIATIONS AND GENERAL NOTES SEE DWG. NO. KLP-GN-03

REFERENCE DRAWINGS :

1. POWERHOUSE, PLAN 1st FLOOR	KLP-PH-02
2. POWERHOUSE, DITCH AND MANHOLE DETAILS	KLP-PH-18
3. TAILRACE, GENERAL LAY-OUT	KLP-TR-01

0 2.5 5 10 15

SCALE 1:200 METERS

KINGDOM OF THAILAND
Department of Alternative Energy Development and Efficiency
MINISTRY OF ENERGY

KLONG LAM PLOK HYDROPOWER PROJECT

CIVIL WORKS AND TRANSMISSION LINE

POWERHOUSE

GENERAL LAY-OUT

NO.	DATE	REVISIONS	CHECKED	APPROVED
3				
2				
1				

CONSULTANTS: DEDE

P&C MANAGEMENT CO.,LTD.

DESIGNED ณัฐ 28.29074 28.6226
DRAWN
CHECKED 28.6226
PROJECT MANAGER 08/03/2559 DATE

Department of Alternative Energy Development and Efficiency
MINISTRY OF ENERGY

REVIEWED
SUBMITTED
RECOMMENDED
APPROVED

DRAWING NO. KLP-PH-01

SHEET NO. 73 OF 110

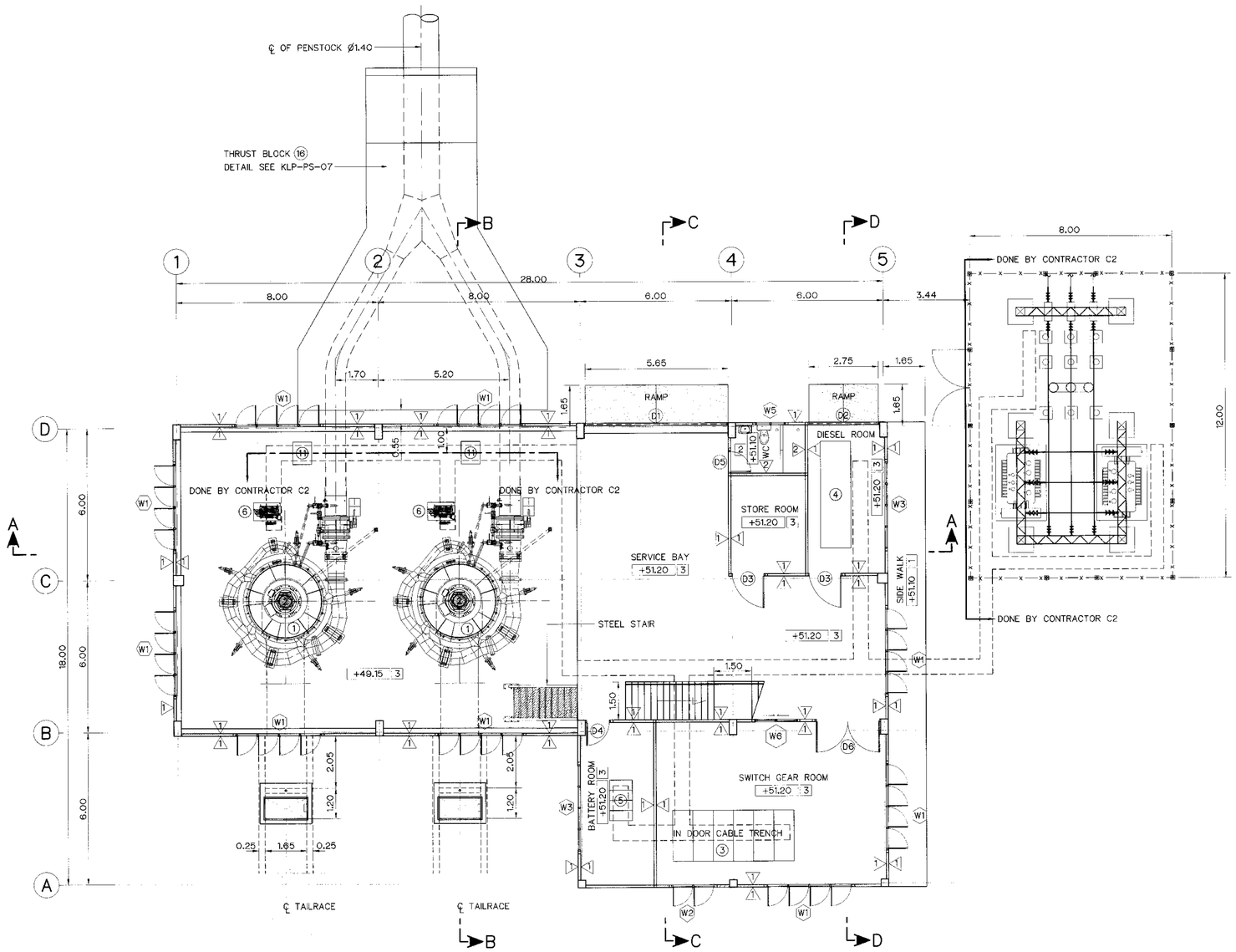

PLAN 1st FLOOR
SCALE 1:100

DESCRIPTIONS :

1. VERTICAL SHAFT KAPLAN TURBINE
2. GENERATOR
3. SWITCH GEAR CUBICLES
4. DIESEL GENERATOR SET
5. BATTERY AND RACK
6. OIL PRESSURE TANK
7. AC AND DC SWITCHBOARD AND
8. BATTERY CHARGER CUBICLE
9. MAIN CONTROL SWITCHBOARD
10. SWITCHYARD
11. NEUTRAL GROUNDING CUBICLE

FLOOR FINISH SYMBOLS :

1. COARSE FINISHED
2. 12"x12" CERAMIC FLOOR TILES
3. COATED WITH EPOXY RESIN

WALL FINISH SYMBOLS :

1. CEMENT PLASTER
2. 8"x8" CERAMIC WALL TILES
3. CLASS BLOCK

NOTES :

1. ALL DIMENSIONS AND ELEVATIONS (M.S.L.) ARE IN METERS, UNLESS OTHERWISE SHOWN.
2. SYMBOLS, ABBREVIATIONS AND GENERAL NOTES SEE DWG. NO. KLP-GN-03

REFERENCE DRAWINGS :

1. POWERHOUSE, GENERAL LAY-OUT	KLP-PH-01
2. POWERHOUSE, PLAN 2nd FLOOR	KLP-PH-03
3. POWERHOUSE, ELEVATIONS	KLP-PH-04
4. POWERHOUSE, SECTIONS	KLP-PH-05
5. POWERHOUSE, DETAILS OF TOILET, AND BUCKET TREATS	KLP-PH-07
6. POWERHOUSE, DETAIL OF DOORS, WINDOWS AND NAMEPLATE	KLP-PH-08

0 1 2 3 4 5 6 7 8
SCALE 1:100 METERS

NO.	DATE	REVISIONS	CHECKED	APPROVED
3				
2				
1				

CONSULTANTS | DEDE

KINGDOM OF THAILAND
Department of Alternative Energy Development and Efficiency
MINISTRY OF ENERGY

KLONG LAM PLOK HYDROPOWER PROJECT

CIVIL WORKS AND TRANSMISSION LINE
POWERHOUSE
PLAN 1st FLOOR

P&C MANAGEMENT CO.,LTD.

Department of Alternative Energy Development and Efficiency
MINISTRY OF ENERGY

REVIEWED		
DESIGNED	RE.29074	RE.6226
SUBMITTED		
DRAWN		
RECOMMENDED		
CHECKED	RE.6226	
APPROVED		
PROJECT MANAGER	08/03/2559 DATE	
DRAWING NO.	KLP-PH-02	
SHEET NO.	74 OF 110	

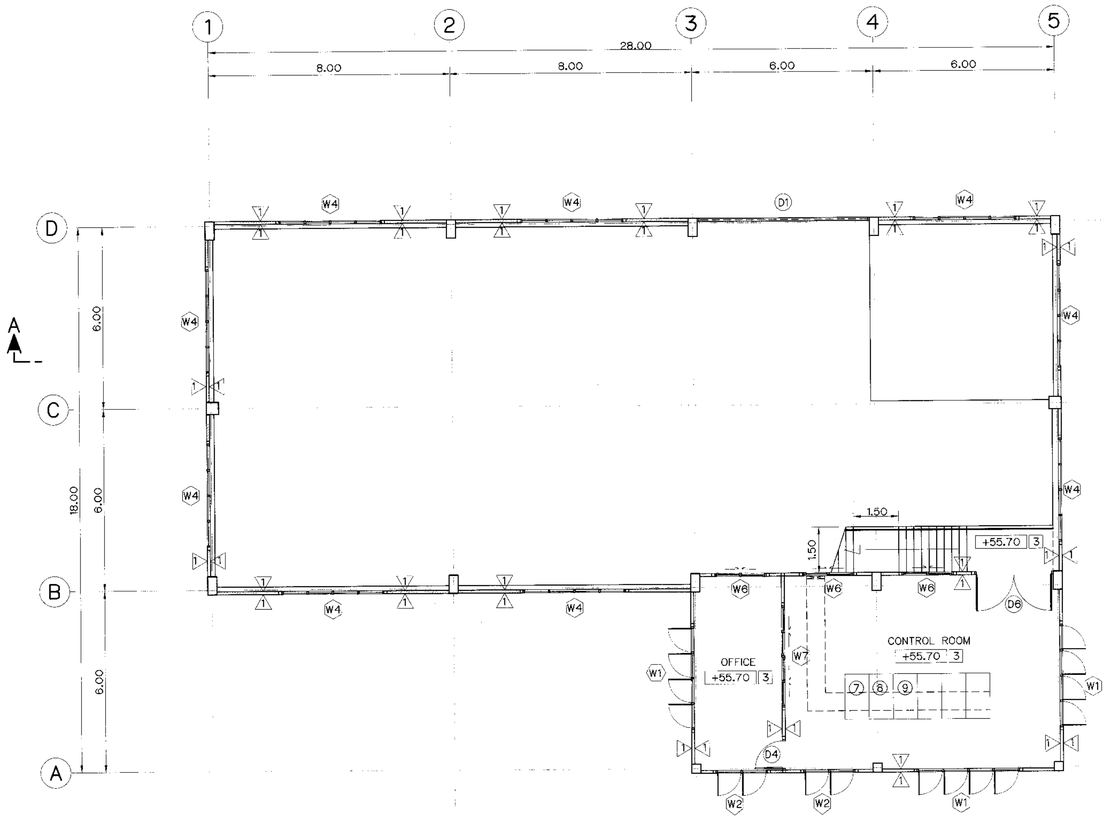

PLAN 2nd FLOOR

SCALE 1:100

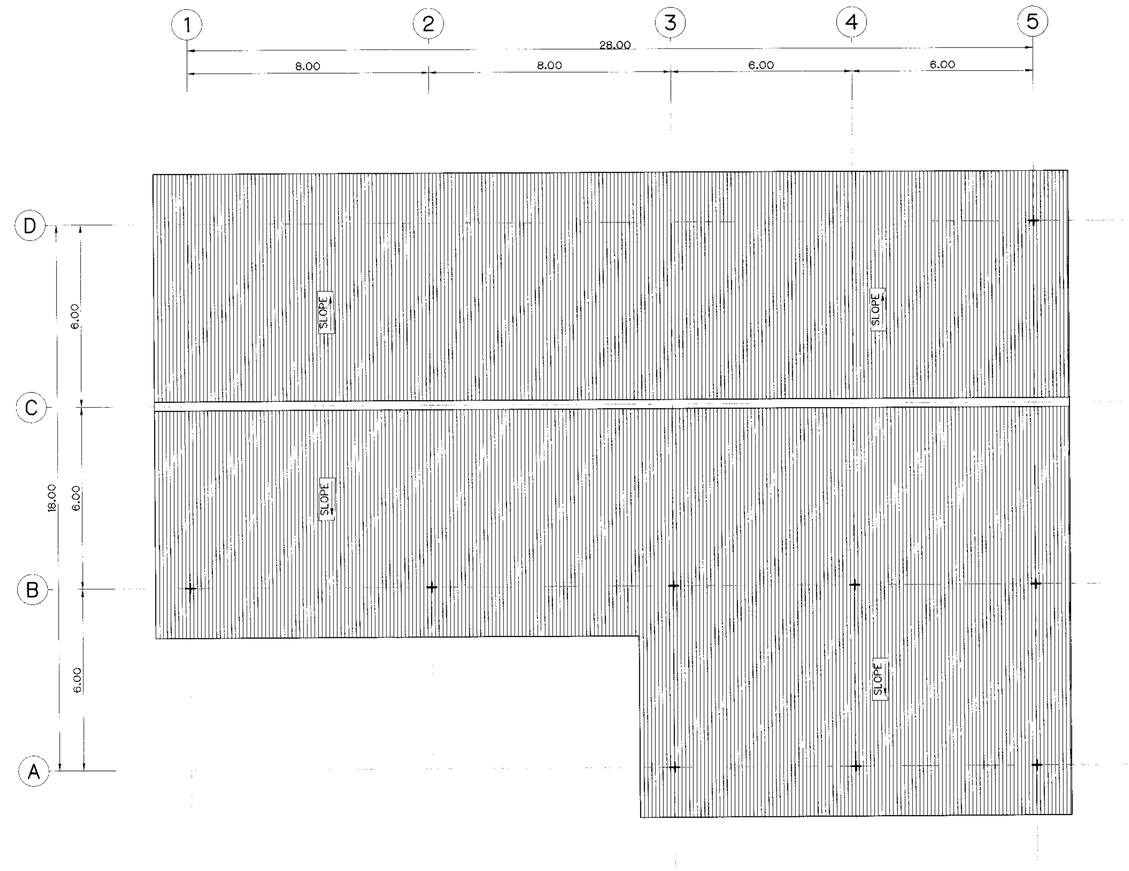

ROOF PLAN

SCALE 1:100

NOTES :

1. ALL DIMENSIONS AND ELEVATIONS (M.S.L.) ARE IN METERS, UNLESS OTHERWISE SHOWN.
2. SYMBOLS, ABBREVIATIONS AND GENERAL NOTES SEE DWG. NO. KLP-GN-03

REFERENCE DRAWINGS :

1. PLAN 1st FLOOR	KLP-PH-02
2. POWERHOUSE, ELEVATIONS	KLP-PH-04

0 1 2 3 4 5 6 7 8

SCALE 1:100 METERS

NO.	DATE	REVISIONS	CHECKED	APPROVED
3				
2				
1				

CONSULTANTS DEDE

KINGDOM OF THAILAND
Department of Alternative Energy Development and Efficiency
MINISTRY OF ENERGY

KLONG LAM PLOK HYDROPOWER PROJECT

CIVIL WORKS AND TRANSMISSION LINE

POWERHOUSE

PLAN 2nd AND ROOF PLAN

P&C MANAGEMENT CO.,LTD.

Department of Alternative Energy Development and Efficiency
MINISTRY OF ENERGY

DESIGNED	สิริ.29074	สิริ.6226	REVIEWED
DRAWN			SUBMITTED
CHECKED	สิริ.6226		RECOMMENDED
PROJECT MANAGER	08/03/2559 DATE		APPROVED

DRAWING NO. KLP-PH-03

SHEET NO. 75 OF 110

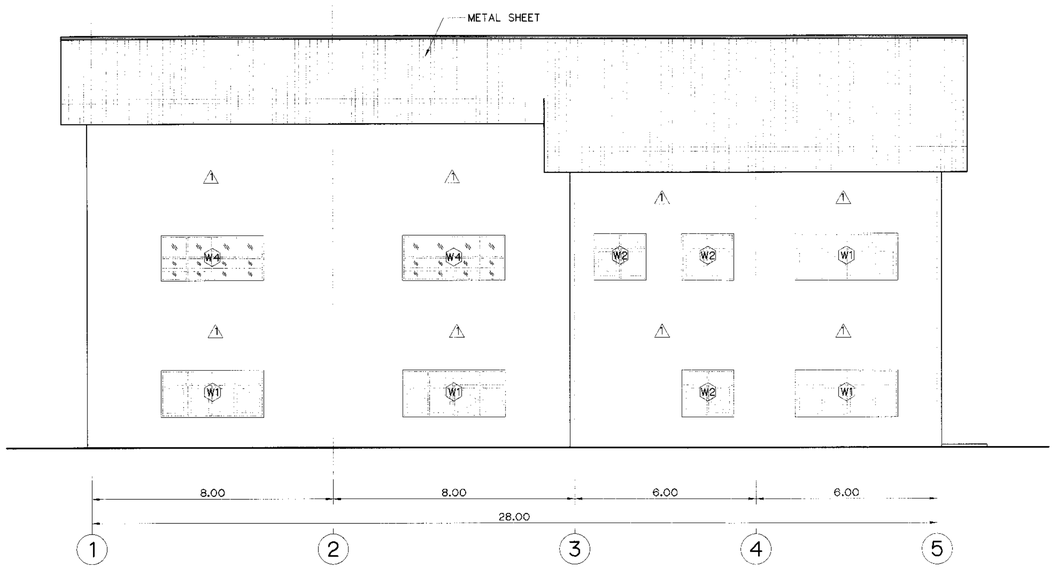

ELEVATION "A"
SCALE 1:100

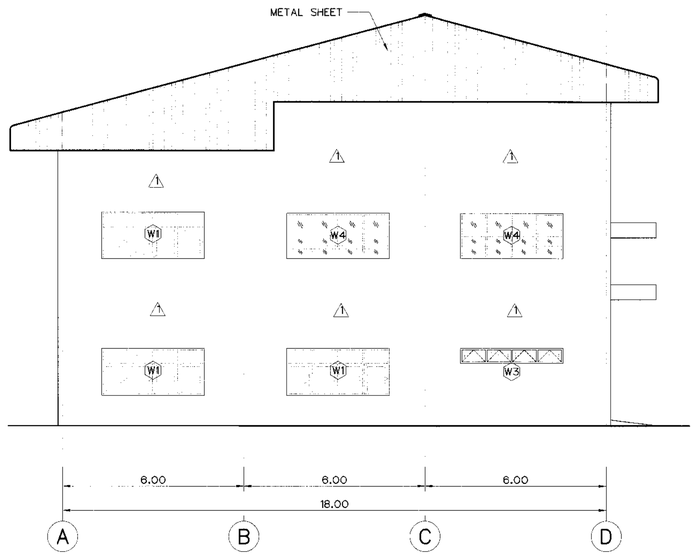

ELEVATION "B"
SCALE 1:100

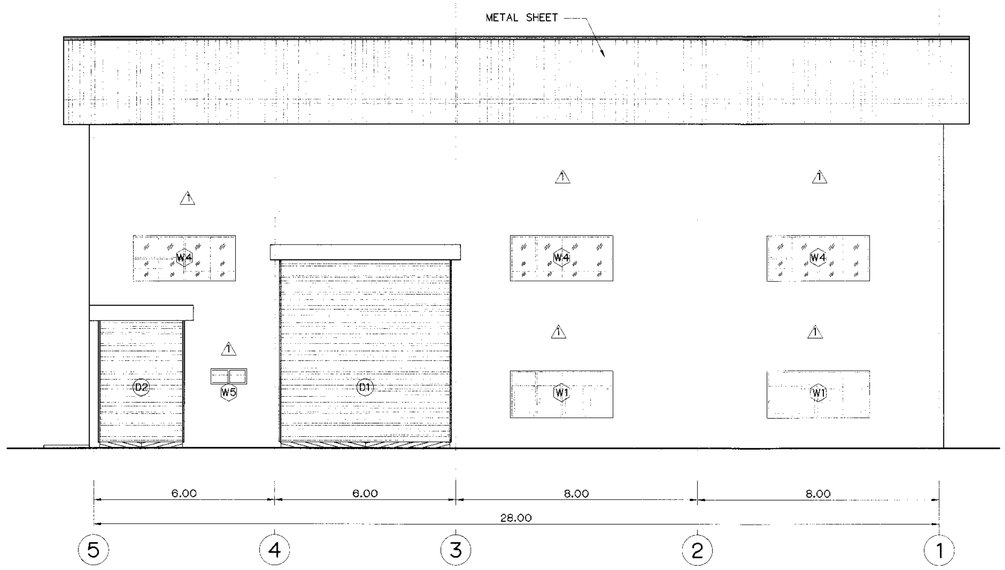

ELEVATION "C"
SCALE 1:100

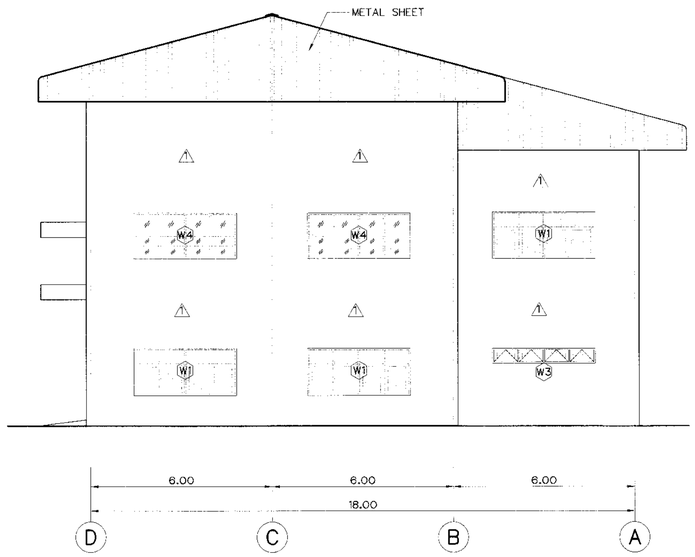

ELEVATION "D"
SCALE 1:100

0 1 2 3 4 5 6 7 8
SCALE 1:100 METERS

NOTES :

1. ALL DIMENSIONS AND ELEVATIONS (M.S.L.) ARE IN METERS, UNLESS OTHERWISE SHOWN.
2. SYMBOLS, ABBREVIATIONS AND GENERAL NOTES SEE DWG. NO. KLP-GN-03

REFERENCE DRAWINGS :

1. PLAN 1st FLOOR	KLP-PH-02
2. PLAN 2nd AND ROOF PLAN	KLP-PH-03

NO.	DATE	REVISIONS	CHECKED	APPROVED
3				
2				
1				

CONSULTANTS | DEDE

KINGDOM OF THAILAND
Department of Alternative Energy Development and Efficiency
MINISTRY OF ENERGY

KLONG LAM PLOK HYDROPOWER PROJECT

CIVIL WORKS AND TRANSMISSION LINE
POWERHOUSE
ELEVATIONS

P&C MANAGEMENT CO.,LTD.

Department of Alternative Energy Development and Efficiency
MINISTRY OF ENERGY

DESIGNED	วิศ.29074	REVIEWED	
DRAWN		SUBMITTED	
CHECKED	วิศ.6228	RECOMMENDED	
PROJECT MANAGER	08/03/2559 DATE	APPROVED	
DRAWING NO.	KLP-PH-04	SHEET NO.	76 OF 110

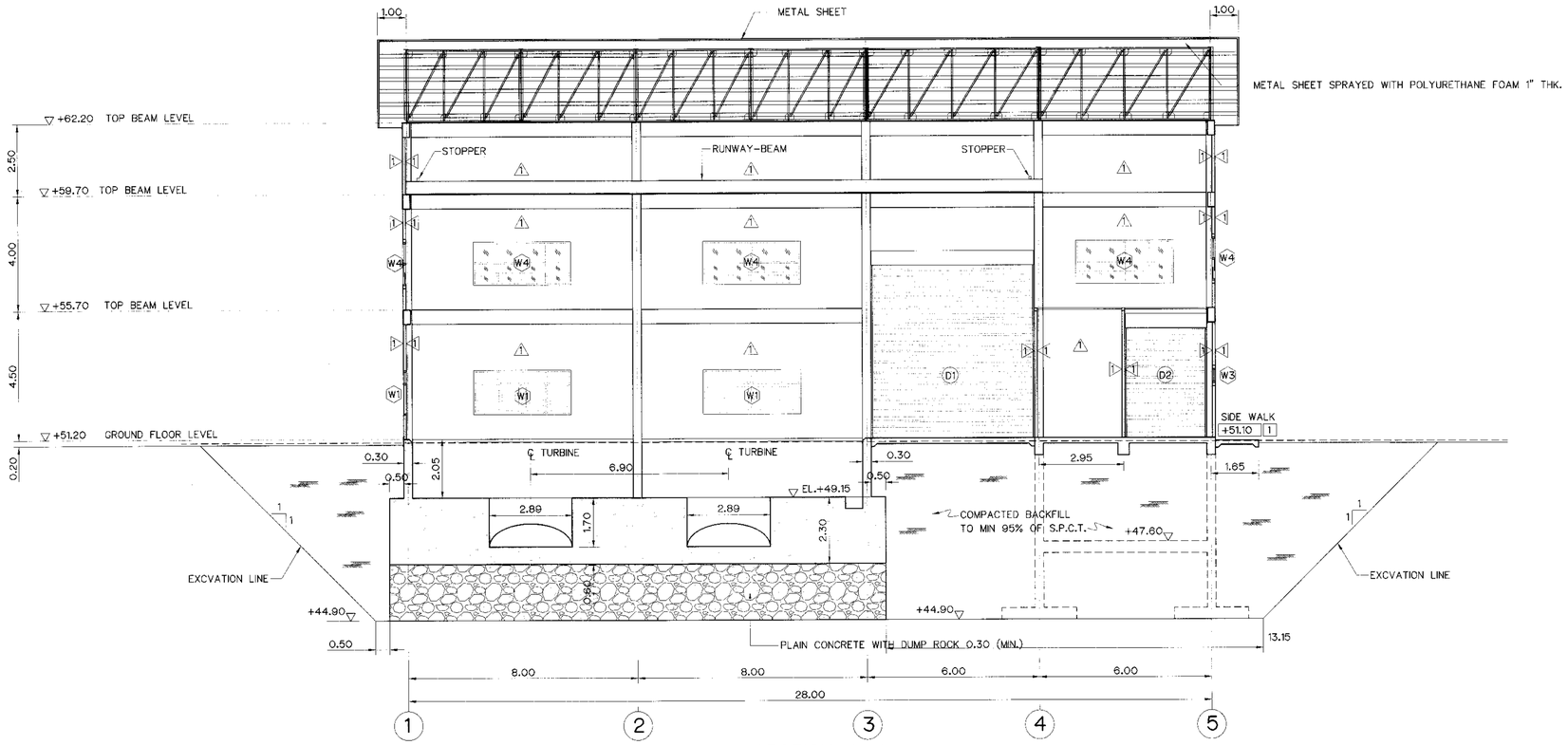

SECTION A–A

SCALE 1:100

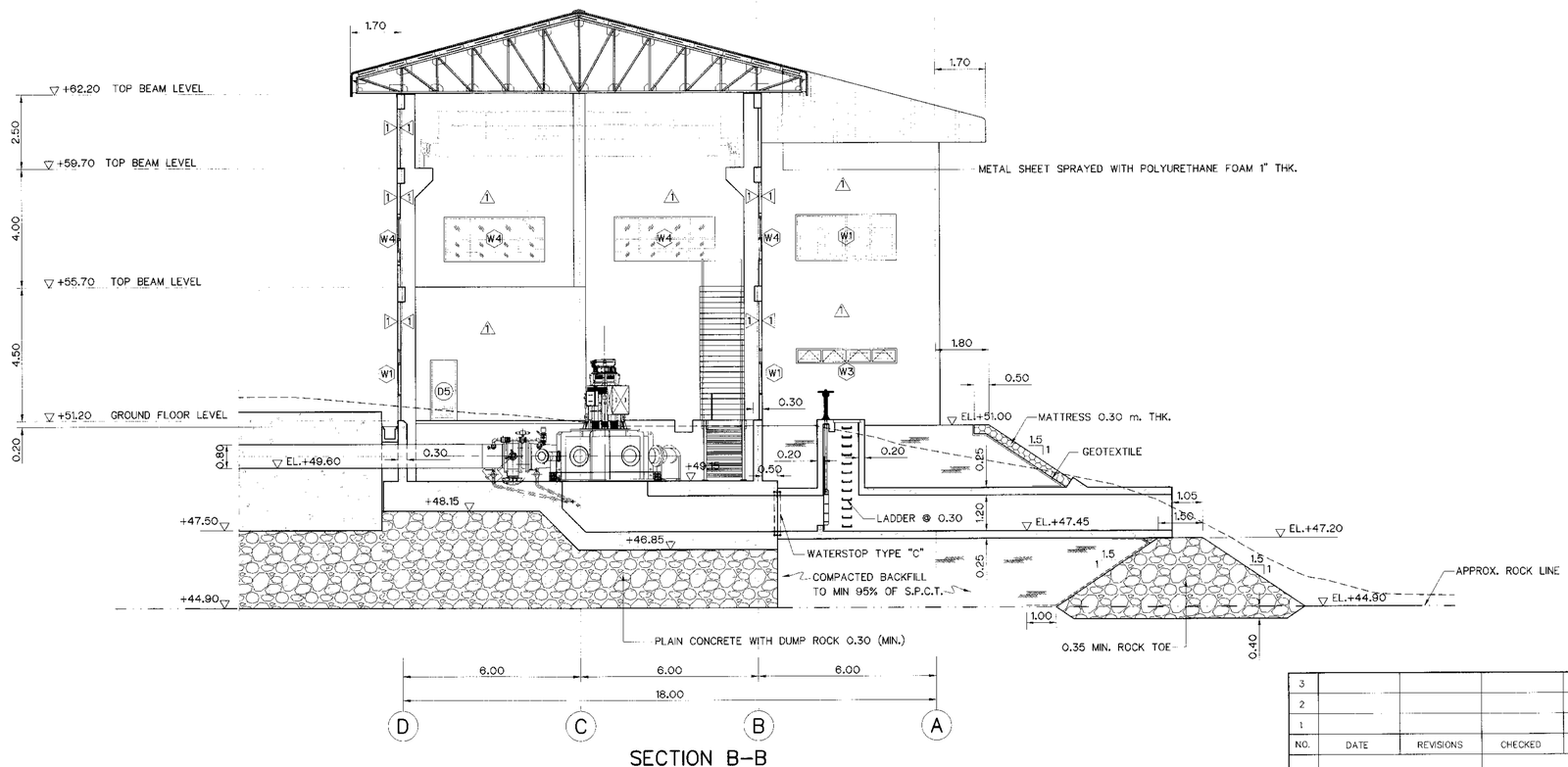

SECTION B–B

SCALE 1:100

NOTES :

1. ALL DIMENSIONS AND ELEVATIONS (M.S.L.) ARE IN METERS, UNLESS OTHERWISE SHOWN.
2. SYMBOLS, ABBREVIATIONS AND GENERAL NOTES SEE DWG. NO. KLP-GN-03

REFERENCE DRAWINGS :

1. PLAN 1st FLOOR	KLP-PH-02
2. PLAN 2nd AND ROOF PLAN	KLP-PH-03
3. ELEVATIONS	KLP-PH-04

0 1 2 3 4 5 6 7 8

SCALE 1:100 METERS

NO.	DATE	REVISIONS	CHECKED	APPROVED
3				
2				
1				

CONSULTANTS DEDE

KINGDOM OF THAILAND
Department of Alternative Energy Development and Efficiency
MINISTRY OF ENERGY

KLONG LAM PLOK HYDROPOWER PROJECT

CIVIL WORKS AND TRANSMISSION LINE
POWERHOUSE
SECTIONS (SHEET 1/2)

P&C MANAGEMENT CO.,LTD.

Department of Alternative Energy Development and Efficiency
MINISTRY OF ENERGY

DESIGNED	สธิ.29074 สธ.6226	REVIEWED	
DRAWN		SUBMITTED	
CHECKED	สธ.6226	RECOMMENDED	
PROJECT MANAGER	08/03/2559 DATE	APPROVED	
DRAWING NO.	KLP-PH-05	SHEET NO.	77 OF 110

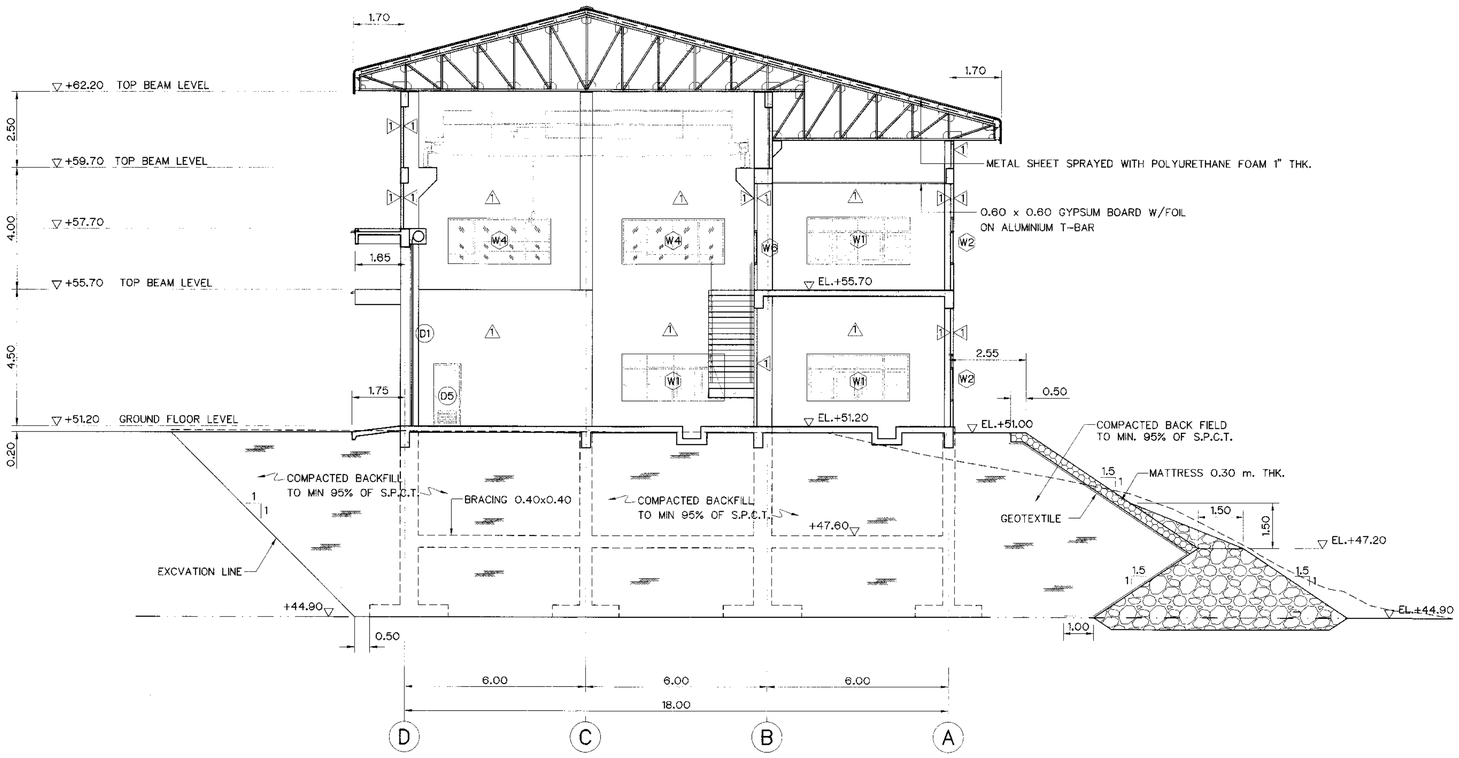

SECTION C-C

SCALE 1:100

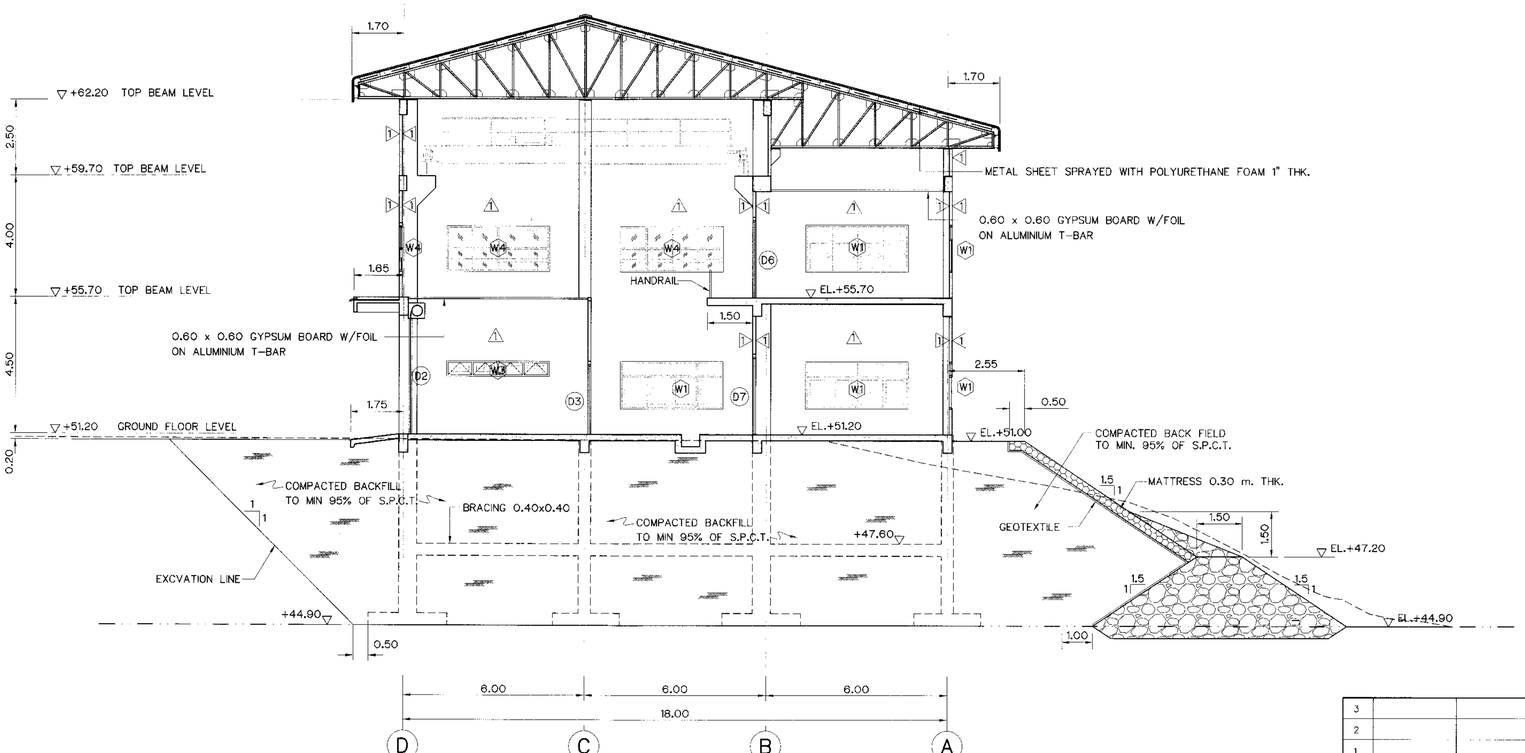

SECTION D-D

SCALE 1:100

NOTES :

1. ALL DIMENSIONS AND ELEVATIONS (M.S.L.) ARE IN METERS, UNLESS OTHERWISE SHOWN.
2. SYMBOLS, ABBREVIATIONS AND GENERAL NOTES SEE DWG. NO. KLP-GN-03

REFERENCE DRAWINGS :

1. PLAN 1st FLOOR	KLP-PH-02
2. PLAN 2nd AND ROOF PLAN	KLP-PH-03
3. ELEVATIONS	KLP-PH-04

0 1 2 3 4 5 6 7 8

SCALE 1:100 METERS

NO.	DATE	REVISIONS	CHECKED	APPROVED
3				
2				
1				

CONSULTANTS DEDE

KINGDOM OF THAILAND
Department of Alternative Energy Development and Efficiency
MINISTRY OF ENERGY

KLONG LAM PLOK HYDROPOWER PROJECT

CIVIL WORKS AND TRANSMISSION LINE

POWERHOUSE

SECTIONS (SHEET 2/2)

P&C MANAGEMENT CO.,LTD.

Department of Alternative Energy Development and Efficiency MINISTRY OF ENERGY

DESIGNED 28.29074 28.6226 REVIEWED
DRAWN SUBMITTED
CHECKED 28.6226 RECOMMENDED
APPROVED

PROJECT MANAGER 08/03/2559 DATE

DRAWING NO. KLP-PH-06

SHEET NO. 78 OF 110

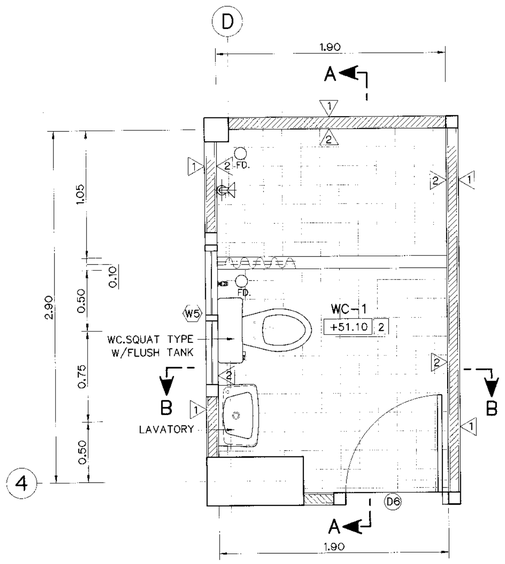

PLAN WC-1
SCALE 1:25

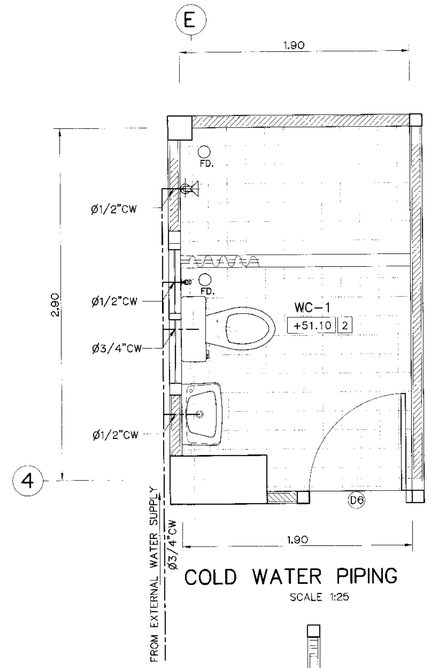

COLD WATER PIPING
SCALE 1:25

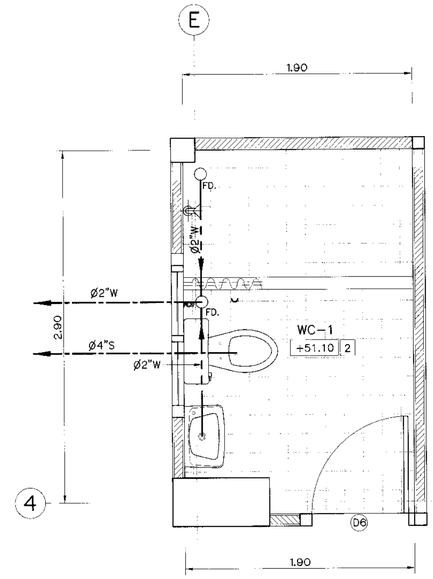

SOIL, WASTE AND VENT PIPING
SCALE 1:25

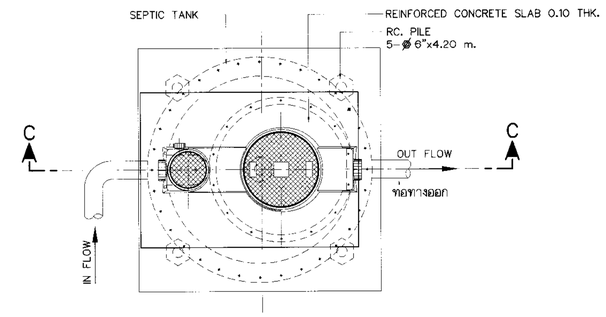

PLAN OF SEPTIC TANK
NOT TO SCALE

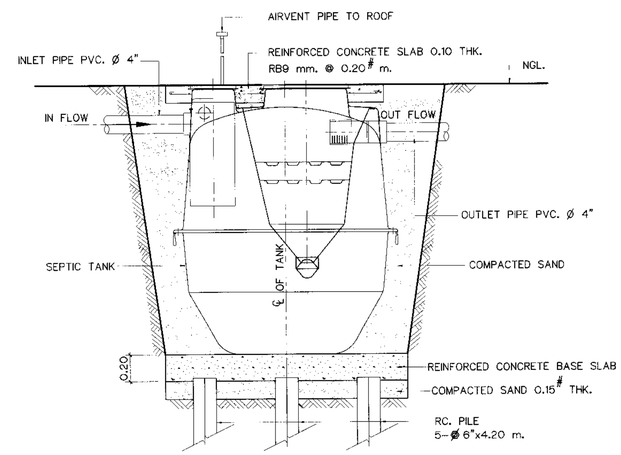

SECTION C-C
NOT TO SCALE

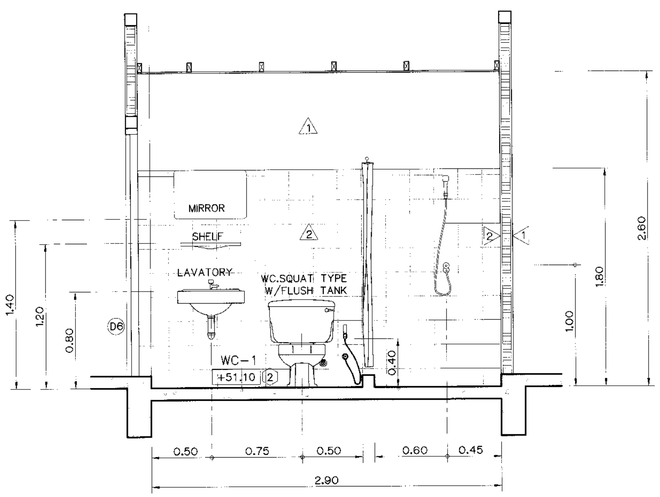

SECTION A-A
SCALE 1:25

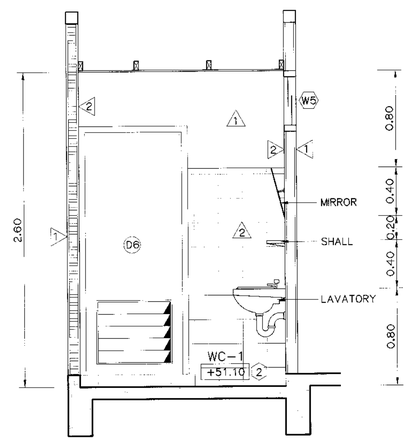

SECTION B-B
SCALE 1:25

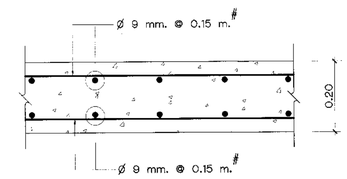

REINFORCEMENT OF BASE SLAB
NOT TO SCALE

APPLICATION AND DIMENSION OF SEPTIC TANK			
NO. OF USER	VOLUMN		CONDITION
	RESIDENTIAL	SOIL ONLY 60 LPCD	16
		TOTAL WASTE 200 LPCD	5

REMARK:LPCD = LITER PER CAPITAL PER DAY

MATERIAL AND APPLICATION OF SEPTIC TANK	
COMPONENTS	MATERIAL
1. TANK BODY	LLDEL (LINER LOW TYPE MEDIUM DENSITY)
2. MANHOLE COVER	ABS (ACRYLONITRILE-BUTADIENCE-STYRENE), IRON CAST
3. INLET, OUTLET PIPES	POLYETHYLENE
4. FLEX	FLEXIBLE FITTING ABS Ø 100 MM.
5. MEDIA	HDPE

SYMBOLS :

- SOIL PIPE
- WASTE PIPE
- COLD WATER PIPE
- VENT PIPE

NOTES :

1. ALL DIMENSIONS AND ELEVATIONS (M.S.L.) ARE IN METERS, UNLESS OTHERWISE SHOWN.
2. SYMBOLS, ABBREVIATIONS AND GENERAL NOTES SEE DWG. NO. KLP-GN-03

REFERENCE DRAWING :

1. POWERHOUSE, PLAN 1st FLOOR KLP-PH-02

0 0.5 1.0 1.5 2.0
SCALE 1:25 METERS

NO.	DATE	REVISIONS	CHECKED	APPROVED
3				
2				
1				
	CONSULTANTS		DEDE	

KINGDOM OF THAILAND
Department of Alternative Energy Development and Efficiency
MINISTRY OF ENERGY

KLONG LAM PLOK HYDROPOWER PROJECT

CIVIL WORKS AND TRANSMISSION LINE
POWERHOUSE
DETAILS OF TOILET, AND BUCKET TREATS

P&C MANAGEMENT CO.,LTD.

DESIGNED REL.29074 REL.6226
DRAWN
CHECKED REL.6226
PROJECT MANAGER 08/03/2559 DATE

Department of Alternative Energy Development and Efficiency
MINISTRY OF ENERGY
REVIEWED
SUBMITTED
RECOMMENDED
APPROVED

DRAWING NO. KLP-PH-07
SHEET NO. 79 OF 110

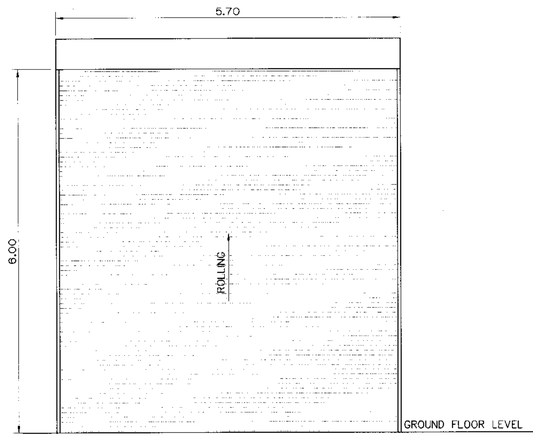

D1

ROLLING DOOR

SCALE 1:50

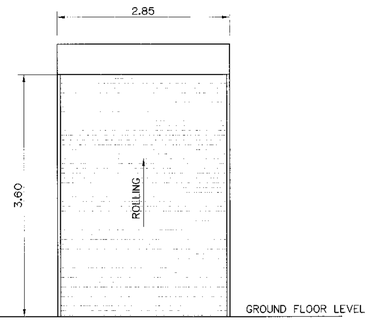

D2

ROLLING DOOR

SCALE 1:50

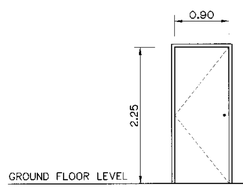

D3

OPENING DOOR

SCALE 1:50

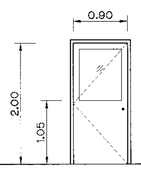

D4

OPENING DOOR

SCALE 1:50

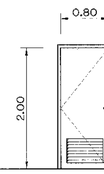

D5

OPENING DOOR

SCALE 1:50

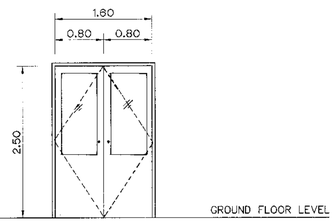

D6

OPENING DOOR

SCALE 1:50

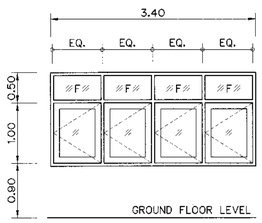

W1

OPENING WINDOW

SCALE 1:50

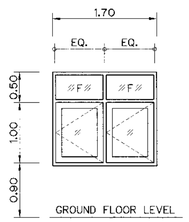

W2

OPENING WINDOW

SCALE 1:50

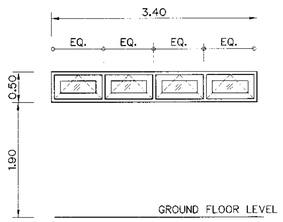

W3

OPENING WINDOW

SCALE 1:50

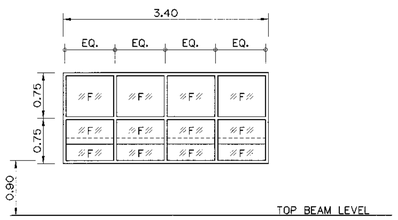

W4

FIX GRASS WINDOW

SCALE 1:50

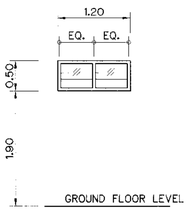

W5

FIX GRASS WINDOW

SCALE 1:50

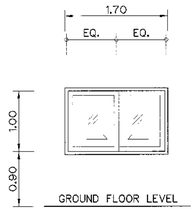

W6

SLIDING WINDOW

SCALE 1:50

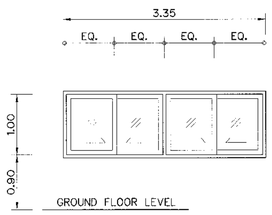

W7

SLIDING WINDOW

SCALE 1:50

SYMBOL	DESCRIPTIONS	SIZE		FRAME	PANEL	HINGE	LOCKSET	HANDLE	REMARKS
		WIDTH	HEIGHT						
D1	ROLLING DOOR (STEEL NO.18,1.2 mm. Thk.)	5.70	6.00	GALVANIZED STEEL	—	—	NORMAL KEY	—	MOTOR OPERATING
D2	ROLLING DOOR (STEEL NO.18,1.2 mm. Thk.)	2.85	3.60	GALVANIZED STEEL	—	—	NORMAL KEY	—	MOTOR OPERATING
D3	OPENING DOOR	0.90	2.25	HARDWOOD 2"x 4"	TEAK PLYWOOD	STAINLESS STEEL 4"x3"x2.5mm.	CYINDER LOCK	—	
D4	OPENING DOOR	0.90	2.00	HARDWOOD 2"x 4"	TEAK PLYWOOD & GLASS 5 mm.thk.	STAINLESS STEEL 4"x3"x2.5mm.	CYINDER LOCK	—	
D5	OPENING DOOR	0.80	2.00	P.V.C. 2"x 4"	P.V.C.	STAINLESS STEEL 4"x3"x2.5mm.	CYINDER LOCK	—	
D6	OPENING DOOR	1.60	2.50	HARDWOOD 2"x 4"	TEAK PLYWOOD & GLASS 5 mm.thk.	STAINLESS STEEL 4"x3"x2.5 mm.	CYINDER LOCK	—	
W1	OPENING WINDOW	3.40	1.50	ALUMINIUM(NA) 2"x 4"	GLASS 5 mm.thk.	●	●	●	FULL SET OF ACCESSORIES FROM MANUFACTURER
W2	OPENING WINDOW	1.70	1.50	ALUMINIUM(NA) 2"x 4"	GLASS 5 mm.thk.	●	●	●	FULL SET OF ACCESSORIES FROM MANUFACTURER
W3	OPENING WINDOW	3.40	0.50	ALUMINIUM(NA) 2"x 4"	GLASS 5 mm.thk.	●	●	●	FULL SET OF ACCESSORIES FROM MANUFACTURER
W4	FIXED GLASS WINDOW	3.40	1.50	ALUMINIUM(NA) 2"x 4"	GLASS 5 mm.thk.	—	—	—	
W5	FIXED GLASS WINDOW	1.20	0.50	ALUMINIUM(NA) 2"x 4"	GLASS 5 mm.thk.	—	—	—	
W6	SLIDING WINDOW	1.70	1.00	ALUMINIUM(NA) 2"x 4"	GLASS 5 mm.thk.	—	—	—	
W7	SLIDING WINDOW	3.35	1.00	ALUMINIUM(NA) 2"x 4"	GLASS 5 mm.thk.	—	●	●	FULL SET OF ACCESSORIES FROM MANUFACTURER
●	SHALL BE USED SPACIFIED ACCESSORIES								

NOTES :

1. ALL DIMENSIONS AND ELEVATIONS (M.S.L.) ARE IN METERS, UNLESS OTHERWISE SHOWN.
2. SYMBOLS, ABBREVIATIONS AND GENERAL NOTES SEE DWG. NO. KLP-GN-03
3. FOR PAINTING WORKS SEE TECHNICAL SPECIFICATION

REFERENCE DRAWINGS :

1. POWERHOUSE, PLAN 1st FLOOR — KLP-PH-02
2. POWERHOUSE, ELEVATIONS — KLP-PH-04
3. POWERHOUSE, SECTIONS (SHEET 1/2) — KLP-PH-05
4. POWERHOUSE, SECTIONS (SHEET 2/2) — KLP-PH-06

0 0.5 1.0 2.0 3.0 4.0
SCALE 1:50 METERS

0 0.1 0.2 0.3 0.4 0.5 0.6 0.7 0.8
SCALE 1:10 METERS

NO.	DATE	REVISIONS	CHECKED	APPROVED
3				
2				
1				

CONSULTANTS — DEDE

KINGDOM OF THAILAND
Department of Alternative Energy Development and Efficiency
MINISTRY OF ENERGY

KLONG LAM PLOK HYDROPOWER PROJECT

CIVIL WORKS AND TRANSMISSION LINE
POWERHOUSE
DETAIL OF DOORS, WINDOWS AND NAME PLATE

P&C MANAGEMENT CO.,LTD.

Department of Alternative Energy Development and Efficiency
MINISTRY OF ENERGY

DESIGNED	สิริ.29074 สิริ.6226	REVIEWED	
DRAWN		SUBMITTED	
CHECKED	สิริ.6226	RECOMMENDED	
PROJECT MANAGER	08/03/2559 DATE	APPROVED	

DRAWING NO. KLP-PH-08

SHEET NO. 80 OF 110

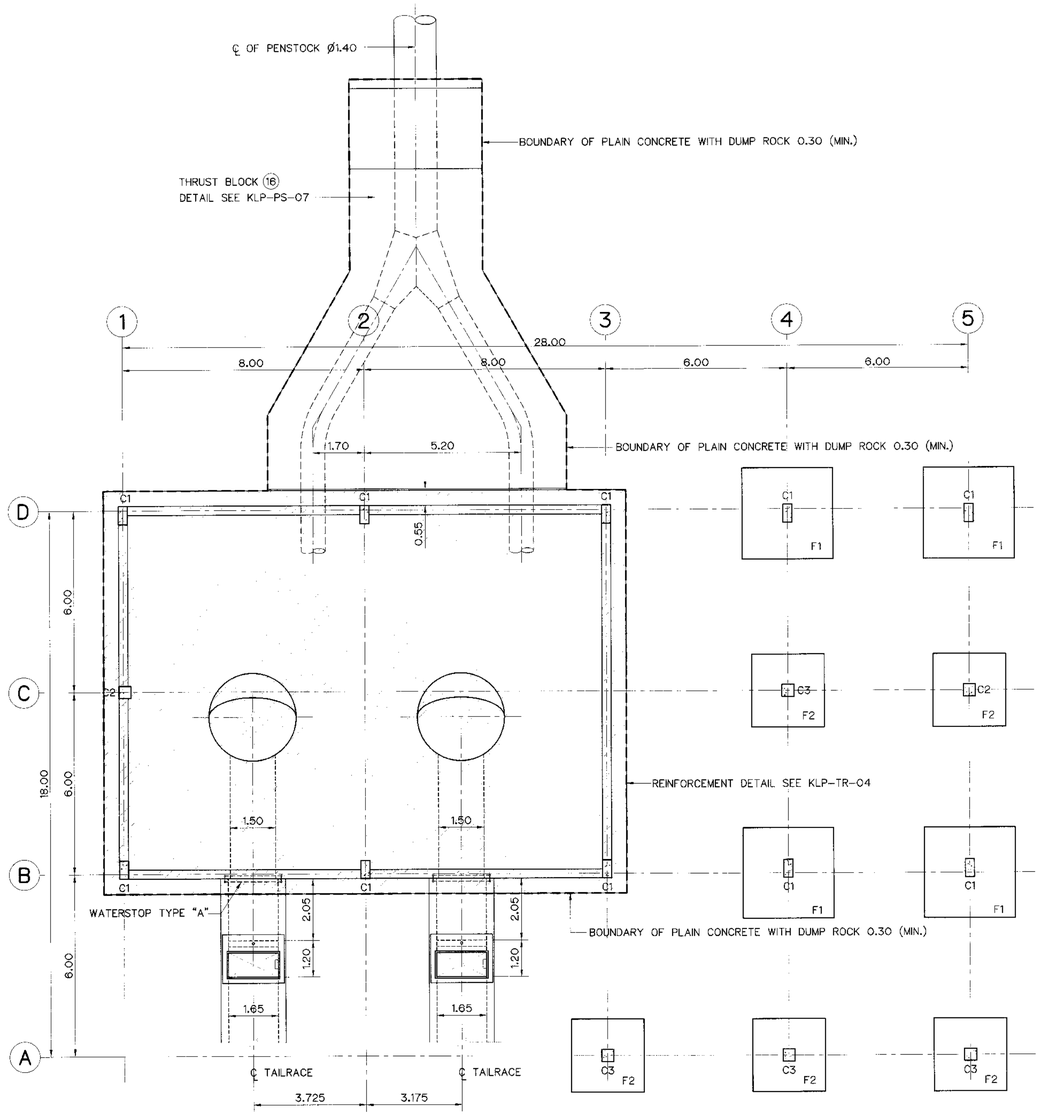

PLAN OF FOOTING

SCALE 1:100

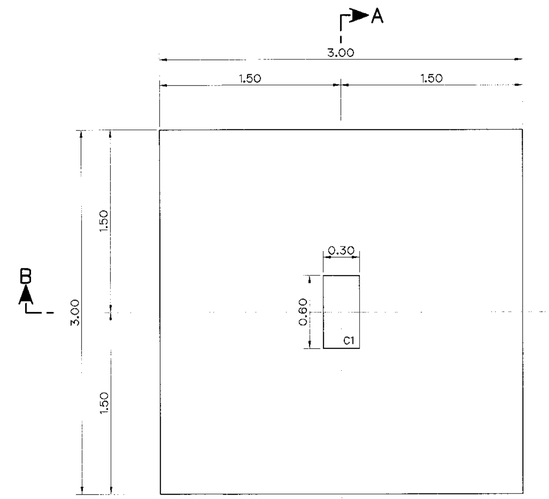

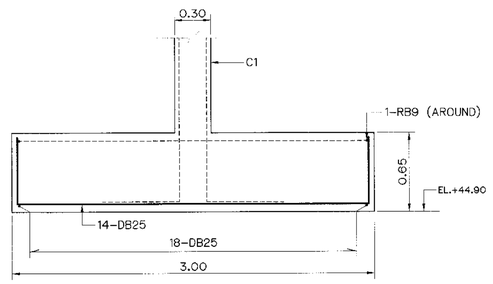

SECTION B-B

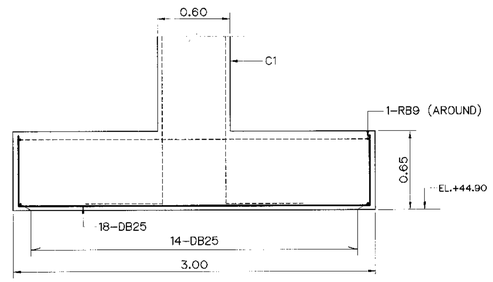

SECTION A-A

FOOTING (F1)

SCALE 1:25

NOTES :

1. ALL DIMENSIONS AND ELEVATIONS (M.S.L.) ARE IN METERS, UNLESS OTHERWISE SHOWN.
2. SYMBOLS, ABBREVIATIONS AND GENERAL NOTES SEE DWG. NO. KLP-GN-03
3. CONCRETE DESIGN BASED ON THE COMPRESSIVE STRENGTH OF 210 KSC, STANDARD CYLINDER Ø0.15x0.30 m. TEST AT AGE 28 DAYS. UNLESS OTHERWISE INDICATED IN SPECIFIC DRAWINGS.
4. ALLOWABLE BEARING CAPACITY OF FOUNDATION SHOULD NOT LESS THAN 20 TON/sq m.

REFERENCE DRAWINGS :

1. POWERHOUSE, PLAN 1st FLOOR KLP-PH-02

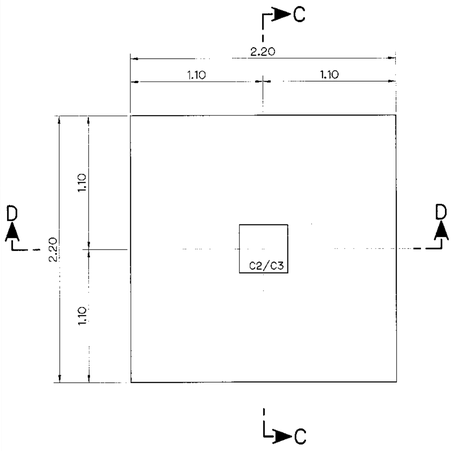

FOOTING (F2)

SCALE 1:25

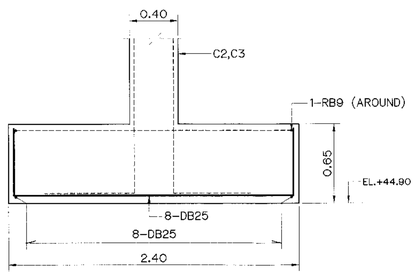

SECTION C-C

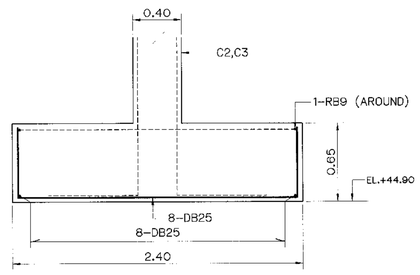

SECTION D-D

0 0.5 1 1.5 2
SCALE 1:25 METERS

0 1 2 3 4 5 6 7 8
SCALE 1:100 METERS

NO.	DATE	REVISIONS	CHECKED	APPROVED
3				
2				
1				
	CONSULTANTS		DEDE	

KINGDOM OF THAILAND
Department of Alternative Energy Development and Efficiency
MINISTRY OF ENERGY

KLONG LAM PLOK HYDROPOWER PROJECT

CIVIL WORKS AND TRANSMISSION LINE
POWERHOUSE
PLAN OF FOOTING AND DETAILS

P&C MANAGEMENT CO.,LTD.

Department of Alternative Energy Development and Efficiency
MINISTRY OF ENERGY

DESIGNED	ME.29074 / EE.6226	REVIEWED	
DRAWN		SUBMITTED	
CHECKED	EE.6226	RECOMMENDED	
PROJECT MANAGER	08/03/2559 DATE	APPROVED	
DRAWING NO.	KLP-PH-09	SHEET NO.	81 OF 110

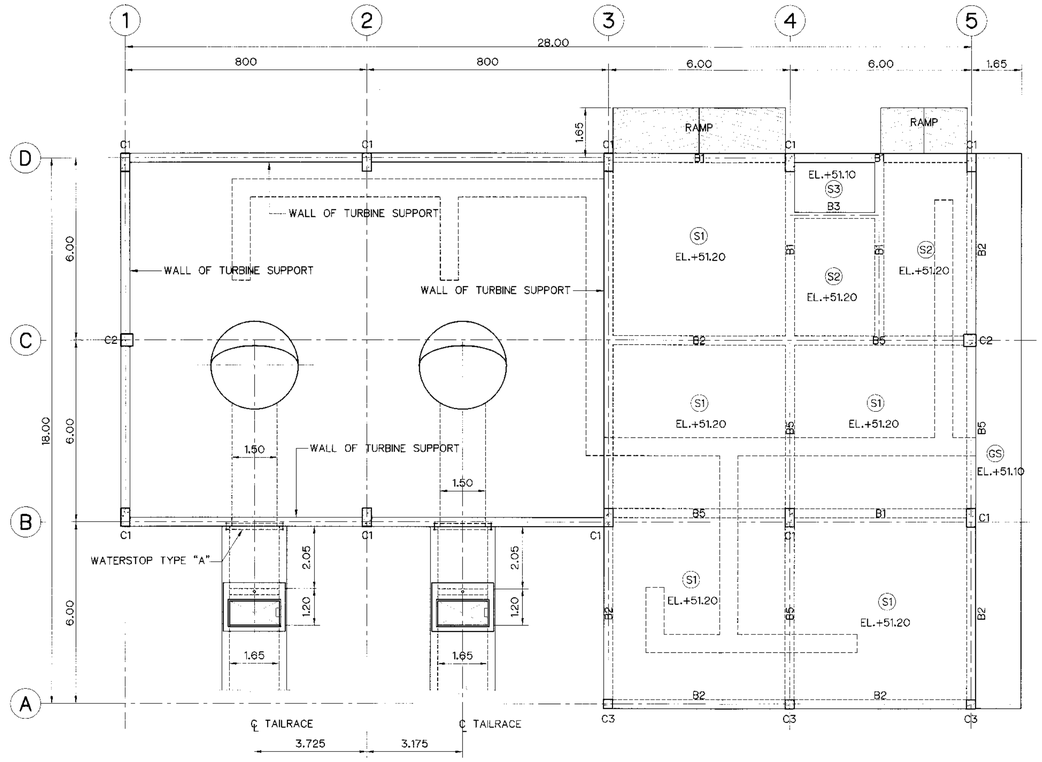

PLAN OF 1st FLOOR (+51.20)

SCALE 1:100

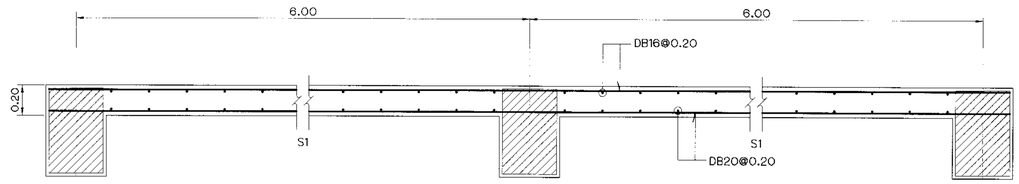

S1

SCALE 1:20

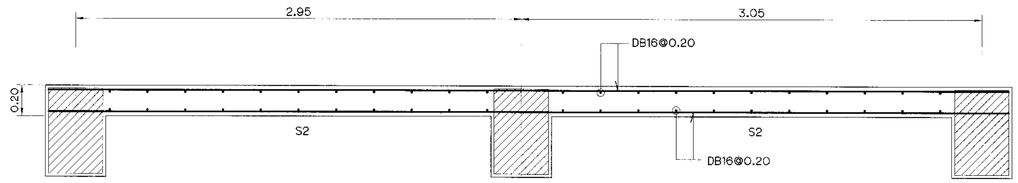

S2

SCALE 1:20

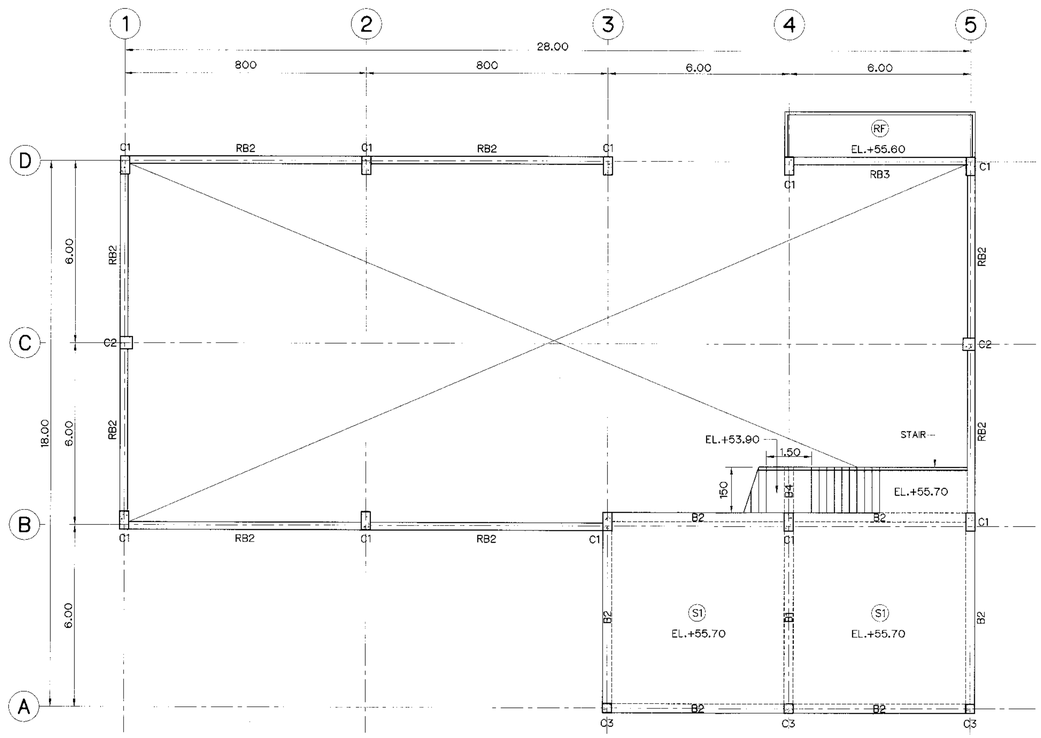

PLAN OF 2nd FLOOR (+55.70)

SCALE 1:100

NOTES :

1. ALL DIMENSIONS AND ELEVATIONS (M.S.L.) ARE IN METERS, UNLESS OTHERWISE SHOWN.
2. SYMBOLS, ABBREVIATIONS AND GENERAL NOTES SEE DWG. NO. KLP-GN-03
3. CONCRETE DESIGN BASED ON THE COMPRESSIVE STRENGTH OF 210 KSC, STANDARD CYLINDER Ø0.15x0.30 m. TEST AT AGE 28 DAYS. UNLESS OTHERWISE INDICATED IN SPECIFIC DRAWINGS.

REFERENCE DRAWINGS :

1. POWERHOUSE, PLAN 1st FLOOR — KLP-PH-02

0 0.5 1 1.5 — SCALE 1:20 METERS

0 1 2 3 4 5 6 7 8 — SCALE 1:100 METERS

NO.	DATE	REVISIONS	CHECKED	APPROVED
3				
2				
1				

CONSULTANTS — DEDE

KINGDOM OF THAILAND
Department of Alternative Energy Development and Efficiency
MINISTRY OF ENERGY

KLONG LAM PLOK HYDROPOWER PROJECT

CIVIL WORKS AND TRANSMISSION LINE
POWERHOUSE
PLAN OF SLAB AND DETAILS (1/2)

P&C MANAGEMENT CO.,LTD.

DESIGNED — 28.29074 — 28.6226
DRAWN
CHECKED — 28.6226
PROJECT MANAGER — 08/03/2559 — DATE

Department of Alternative Energy Development and Efficiency
MINISTRY OF ENERGY
REVIEWED
SUBMITTED
RECOMMENDED
APPROVED

DRAWING NO. KLP-PH-10

SHEET NO. 82 OF 110

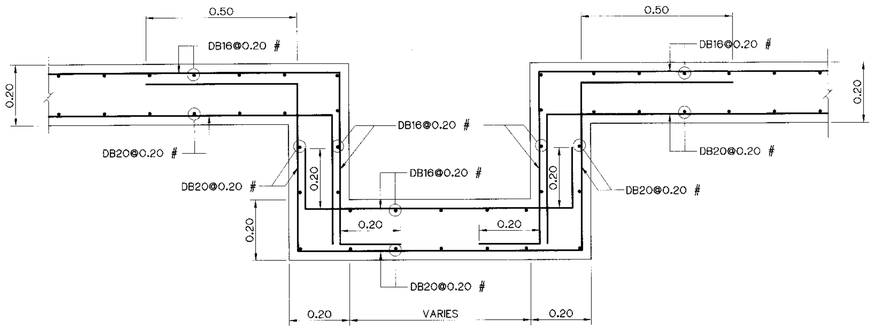

REINFORCEMENT DETAILS OF CABLE TRENCH AT SLAB S1

SCALE 1:10

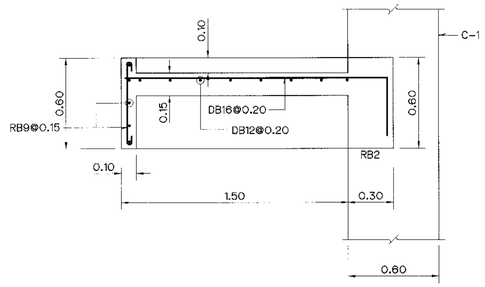

RF

SCALE 1:20

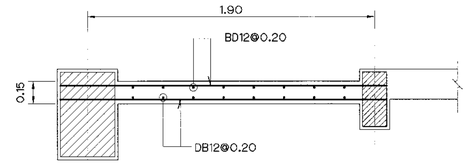

S3

SCALE 1:20

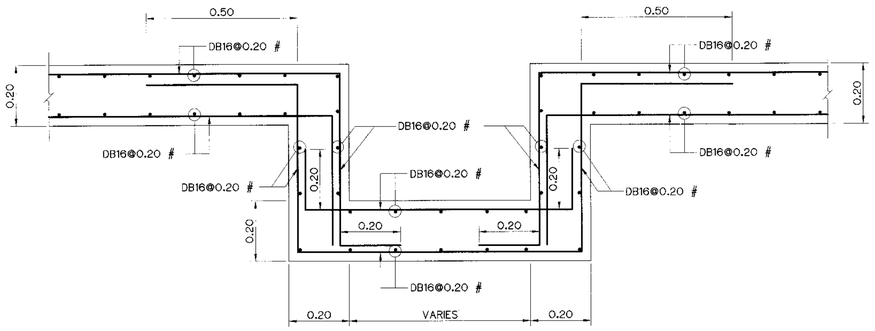

REINFORCEMENT DETAILS OF CABLE TRENCH AT SLAB S2

SCALE 1:10

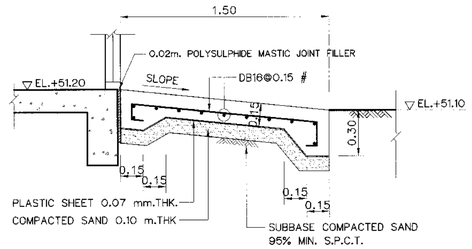

RAMP

SCALE 1:20

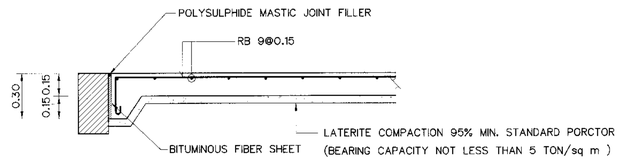

GS

SCALE 1:20

NOTES :

1. ALL DIMENSIONS AND ELEVATIONS (M.S.L.) ARE IN METERS, UNLESS OTHERWISE SHOWN.
2. SYMBOLS, ABBREVIATIONS AND GENERAL NOTES SEE DWG. NO. KLP-GN-03
3. CONCRETE DESIGN BASED ON THE COMPRESSIVE STRENGTH OF 210 KSC, STANDARD CYLINDER Ø0.15x0.30 m. TEST AT AGE 28 DAYS. UNLESS OTHERWISE INDICATED IN SPECIFIC DRAWINGS.

REFERENCE DRAWINGS :

1. POWERHOUSE, PLAN 1st FLOOR — KLP-PH-02

0 0.5 1 1.5
SCALE 1:20 METERS

0 1 2 3 4 5 6 7 8
SCALE 1:100 METERS

NO.	DATE	REVISIONS	CHECKED	APPROVED
3				
2				
1				
	CONSULTANTS		DEDE	

KINGDOM OF THAILAND
Department of Alternative Energy Development and Efficiency
MINISTRY OF ENERGY

KLONG LAM PLOK HYDROPOWER PROJECT

CIVIL WORKS AND TRANSMISSION LINE
POWERHOUSE
PLAN OF SLAB AND DETAILS (2/2)

P&C MANAGEMENT CO.,LTD.

Department of Alternative Energy Development and Efficiency
MINISTRY OF ENERGY

DESIGNED	สธ.29074	สธ.6226	REVIEWED
DRAWN			SUBMITTED
CHECKED		สธ.6226	RECOMMENDED
PROJECT MANAGER		08/03/2559 DATE	APPROVED

DRAWING NO. KLP-PH-11

SHEET NO. 83 OF 110

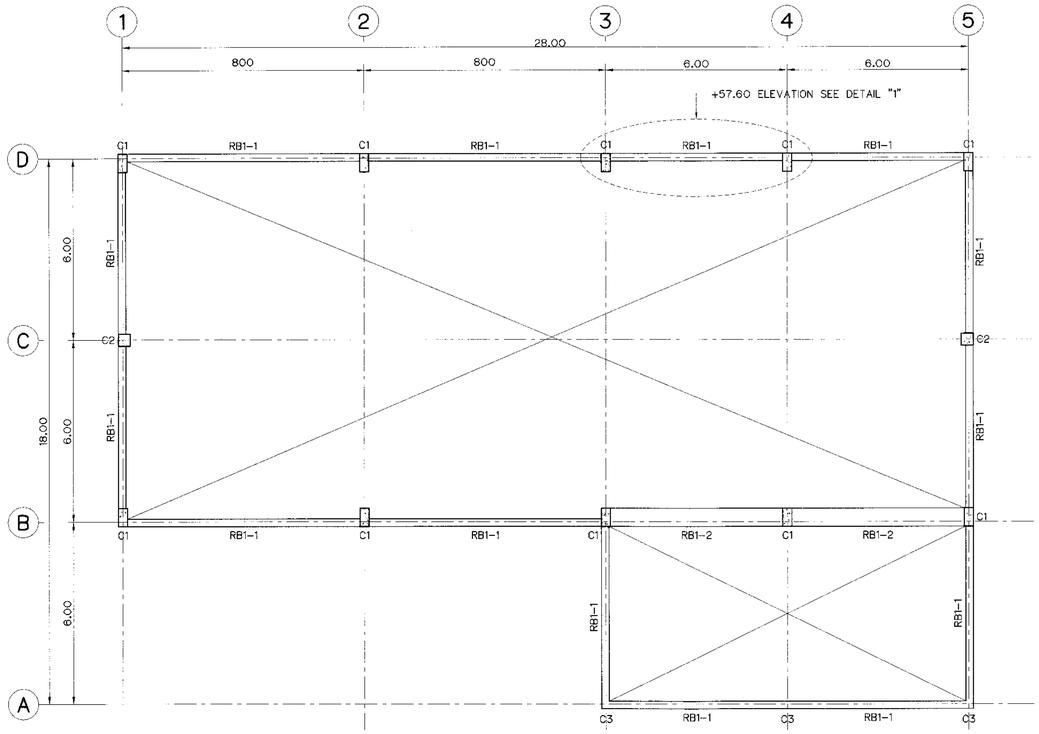

+59.70 ELEVATION PLAN

SCALE 1:100

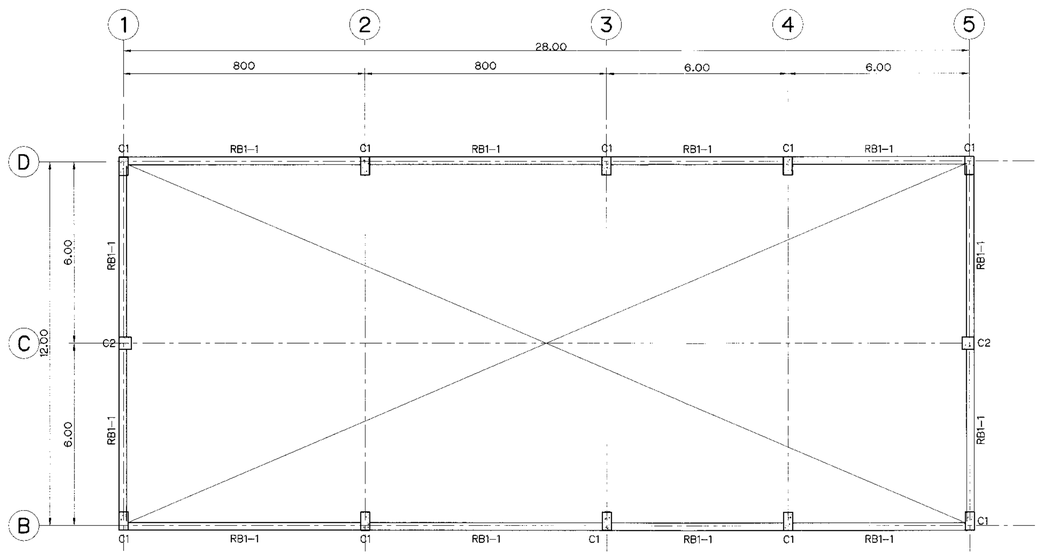

+62.20 ELEVATION PLAN

SCALE 1:100

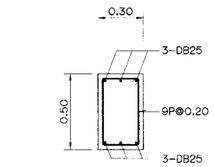

RB1-1

SCALE 1:20

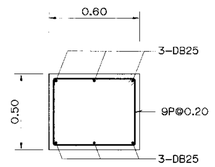

RB1-2

SCALE 1:20

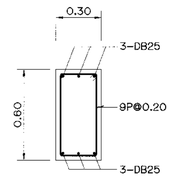

RB2

SCALE 1:20

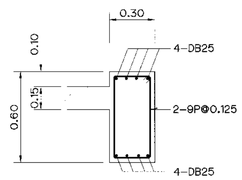

RB3

SCALE 1:20

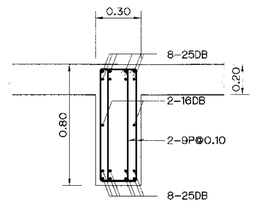

B1

SCALE 1:20

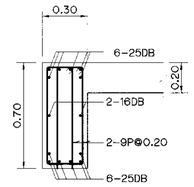

B2

SCALE 1:20

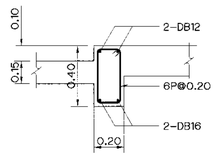

B3

SCALE 1:20

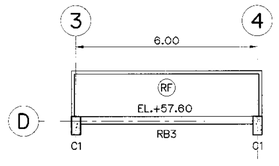

DETAIL "1"

SCALE 1:100

0 0.5 1 1.5

SCALE 1:20 METERS

0 1 2 3 4 5 6 7 8

SCALE 1:100 METERS

NOTES :

1. ALL DIMENSIONS AND ELEVATIONS (M.S.L.) ARE IN METERS, UNLESS OTHERWISE SHOWN.
2. SYMBOLS, ABBREVIATIONS AND GENERAL NOTES SEE DWG. NO. KLP-GN-03
3. CONCRETE DESIGN BASED ON THE COMPRESSIVE STRENGTH OF 210 KSC, STANDARD CYLINDER Ø0.15x0.30 m. TEST AT AGE 28 DAYS. UNLESS OTHERWISE INDICATED IN SPECIFIC DRAWINGS.

REFERENCE DRAWINGS :

1. POWERHOUSE, PLAN 1st FLOOR — KLP-PH-02
2. POWERHOUSE, PLAN 2st AND ROOF PLAN — KLP-PH-03

NO.	DATE	REVISIONS	CHECKED	APPROVED
3				
2				
1				

CONSULTANTS — DEDE

KINGDOM OF THAILAND
Department of Alternative Energy Development and Efficiency
MINISTRY OF ENERGY

KLONG LAM PLOK HYDROPOWER PROJECT

CIVIL WORKS AND TRANSMISSION LINE

POWERHOUSE

BEAMS DETAILS

P&C MANAGEMENT CO.,LTD.

Department of Alternative Energy Development and Efficiency
MINISTRY OF ENERGY

REVIEWED

DESIGNED ณัฐ.29074 ณัฐ.6226

SUBMITTED

DRAWN

RECOMMENDED

CHECKED ณัฐ.6226

APPROVED

PROJECT MANAGER 08/03/2559 DATE

DRAWING NO. KLP-PH-12

SHEET NO. 84 OF 110

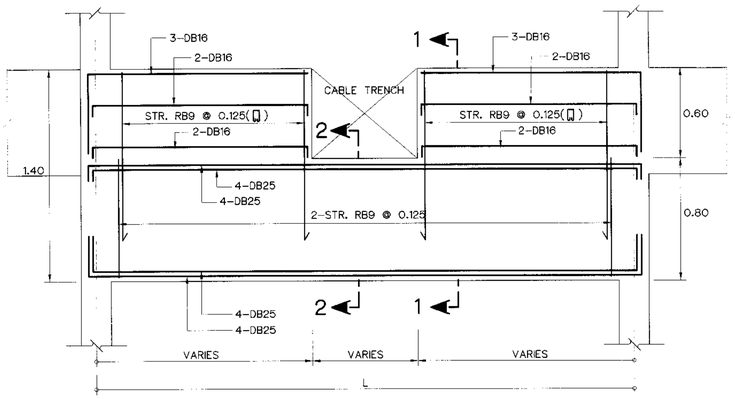

REINFORCEMENT DETAILS OF CABLE TRENCH AT BEAM B5

SCALE 1:20

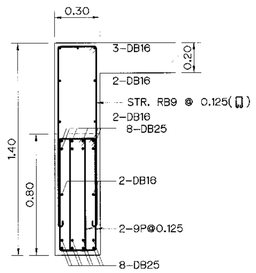

SECTION 1-1

SCALE 1:20

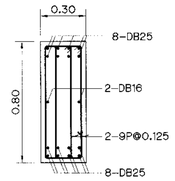

SECTION 2-2

SCALE 1:20

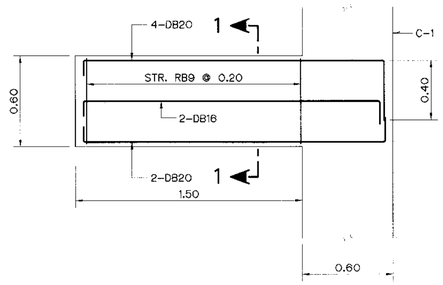

REINFORCEMENT DETAILS BEAM B4

SCALE 1:20

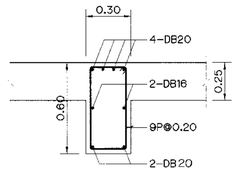

SECTION 1-1

SCALE 1:20

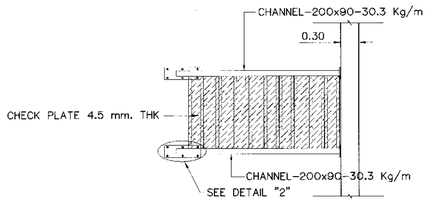

PLAN

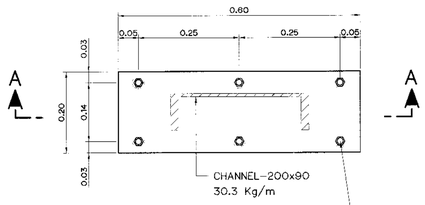

DETAIL "2"

NOT TO SCALE

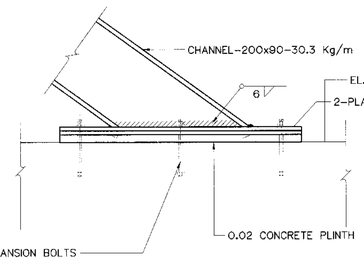

SECTION A-A

NOT TO SCALE

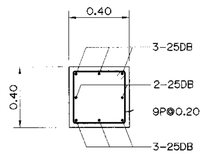

BRACING

SCALE 1:20

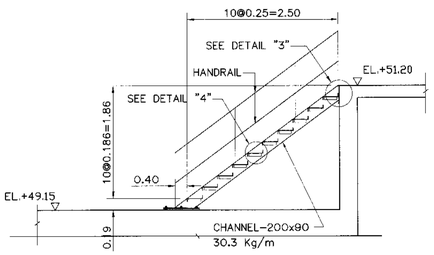

SECTION

NOT TO SCALE

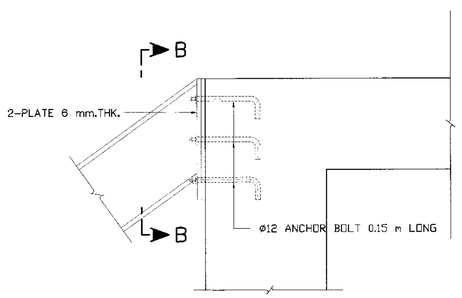

DETAIL "3"

NOT TO SCALE

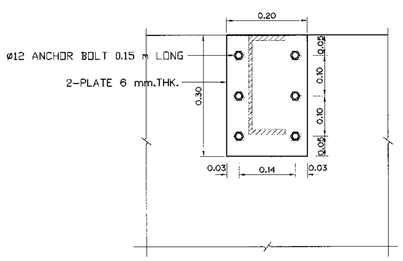

SECTION B-B

NOT TO SCALE

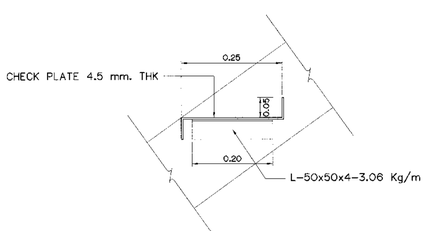

DETAIL "4"

SCALE 1:7.5

0 0.5 1 1.5

SCALE 1:20 METERS

0 1 2 3 4 5 6 7 8

SCALE 1:100 METERS

NOTES :

1. ALL DIMENSIONS AND ELEVATIONS (M.S.L.) ARE IN METERS, UNLESS OTHERWISE SHOWN.
2. SYMBOLS, ABBREVIATIONS AND GENERAL NOTES SEE DWG. NO. KLP-GN-03
3. CONCRETE DESIGN BASED ON THE COMPRESSIVE STRENGTH OF 210 KSC, STANDARD CYLINDER Ø0.15x0.30 m. TEST AT AGE 28 DAYS. UNLESS OTHERWISE INDICATED IN SPECIFIC DRAWINGS.

REFERENCE DRAWINGS :

1. POWERHOUSE, PLAN 1st FLOOR — KLP-PH-02
2. POWERHOUSE, PLAN 2st AND ROOF PLAN — KLP-PH-03

NO.	DATE	REVISIONS	CHECKED	APPROVED
3				
2				
1				

CONSULTANTS — DEDE

KINGDOM OF THAILAND
Department of Alternative Energy Development and Efficiency
MINISTRY OF ENERGY

KLONG LAM PLOK HYDROPOWER PROJECT

CIVIL WORKS AND TRANSMISSION LINE

POWERHOUSE

BEAMS DETAILS AND STEEL STAIR

P&C MANAGEMENT CO.,LTD.

Department of Alternative Energy Development and Efficiency
MINISTRY OF ENERGY

DESIGNED — REVIEWED
DRAWN — SUBMITTED
CHECKED — RECOMMENDED
APPROVED

PROJECT MANAGER — DATE 08/03/2559

DRAWING NO. KLP-PH-13

SHEET NO. 85 OF 110

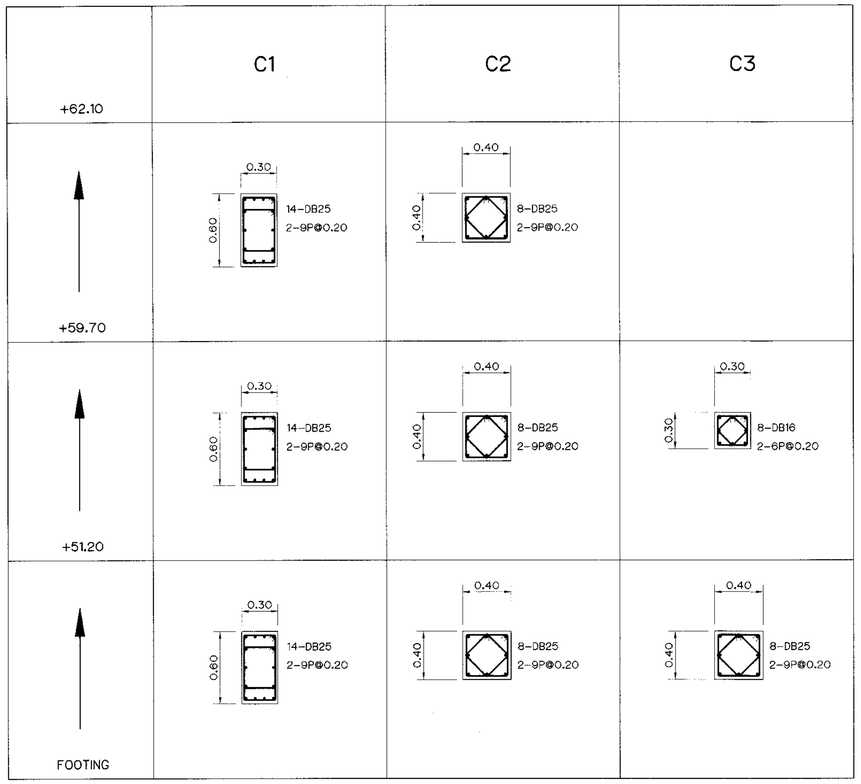

COLUMN DETAIL

SCALE 1:25

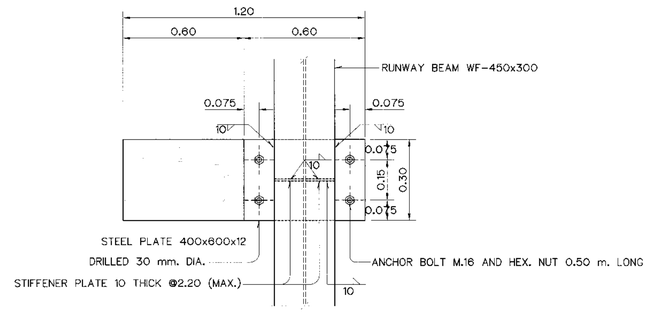

PLAN

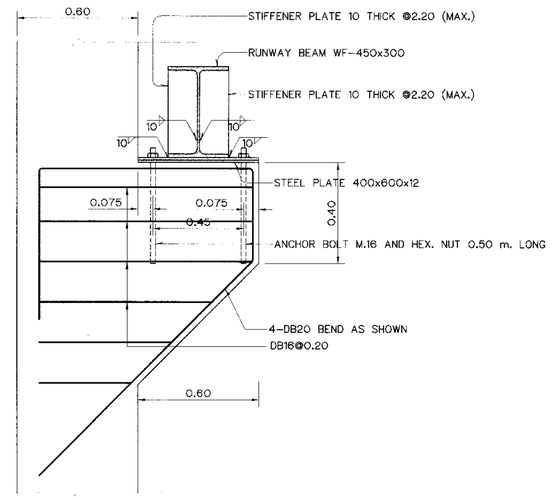

RUNWAY BEAM AND BRACKET

SCALE 1:15

SECTION

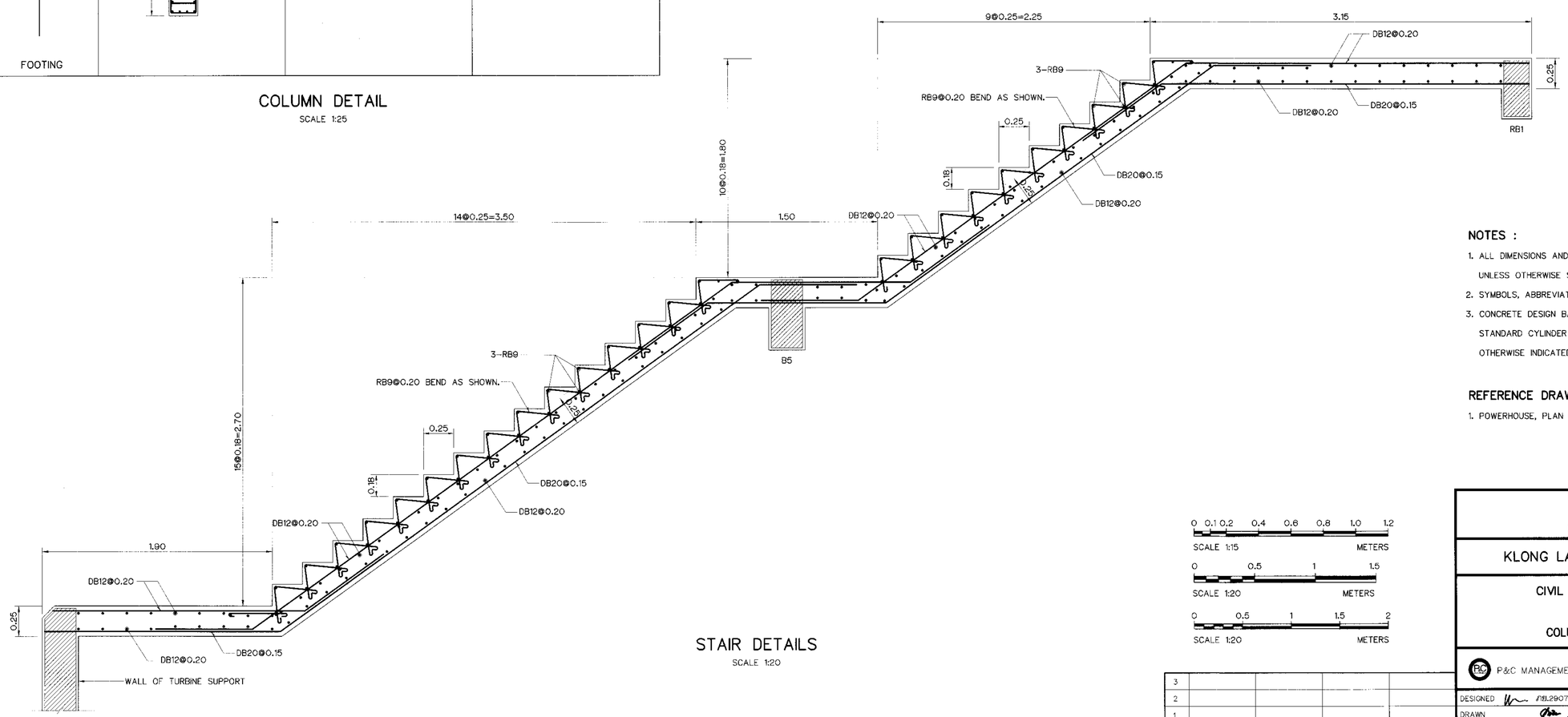

STAIR DETAILS

SCALE 1:20

0 0.1 0.2 0.4 0.6 0.8 1.0 1.2
SCALE 1:15 METERS

0 0.5 1 1.5
SCALE 1:20 METERS

0 0.5 1 1.5 2
SCALE 1:20 METERS

NOTES :

1. ALL DIMENSIONS AND ELEVATIONS (M.S.L.) ARE IN METERS, UNLESS OTHERWISE SHOWN.
2. SYMBOLS, ABBREVIATIONS AND GENERAL NOTES SEE DWG. NO. KLP-GN-03
3. CONCRETE DESIGN BASED ON THE COMPRESSIVE STRENGTH OF 210 KSC, STANDARD CYLINDER Ø0.15x0.30 m. TEST AT AGE 28 DAYS. UNLESS OTHERWISE INDICATED IN SPECIFIC DRAWINGS.

REFERENCE DRAWINGS :

1. POWERHOUSE, PLAN OF SLAB AND DETAILS KLP-PH-10

NO.	DATE	REVISIONS	CHECKED	APPROVED
3				
2				
1				

CONSULTANTS | DEDE

KINGDOM OF THAILAND
Department of Alternative Energy Development and Efficiency
MINISTRY OF ENERGY

KLONG LAM PLOK HYDROPOWER PROJECT

CIVIL WORKS AND TRANSMISSION LINE
POWERHOUSE
COLUMN BRACKET AND STAIR DETAILS

P&C MANAGEMENT CO.,LTD.

Department of Alternative Energy Development and Efficiency
MINISTRY OF ENERGY

DESIGNED	สิริ.29074 สิริ.6226	SUBMITTED	
DRAWN		RECOMMENDED	
CHECKED	สิริ.6226	APPROVED	P. Hanrell
PROJECT MANAGER	08/03/2559 DATE	DRAWING NO. KLP-PH-14	SHEET NO. 86 OF 110

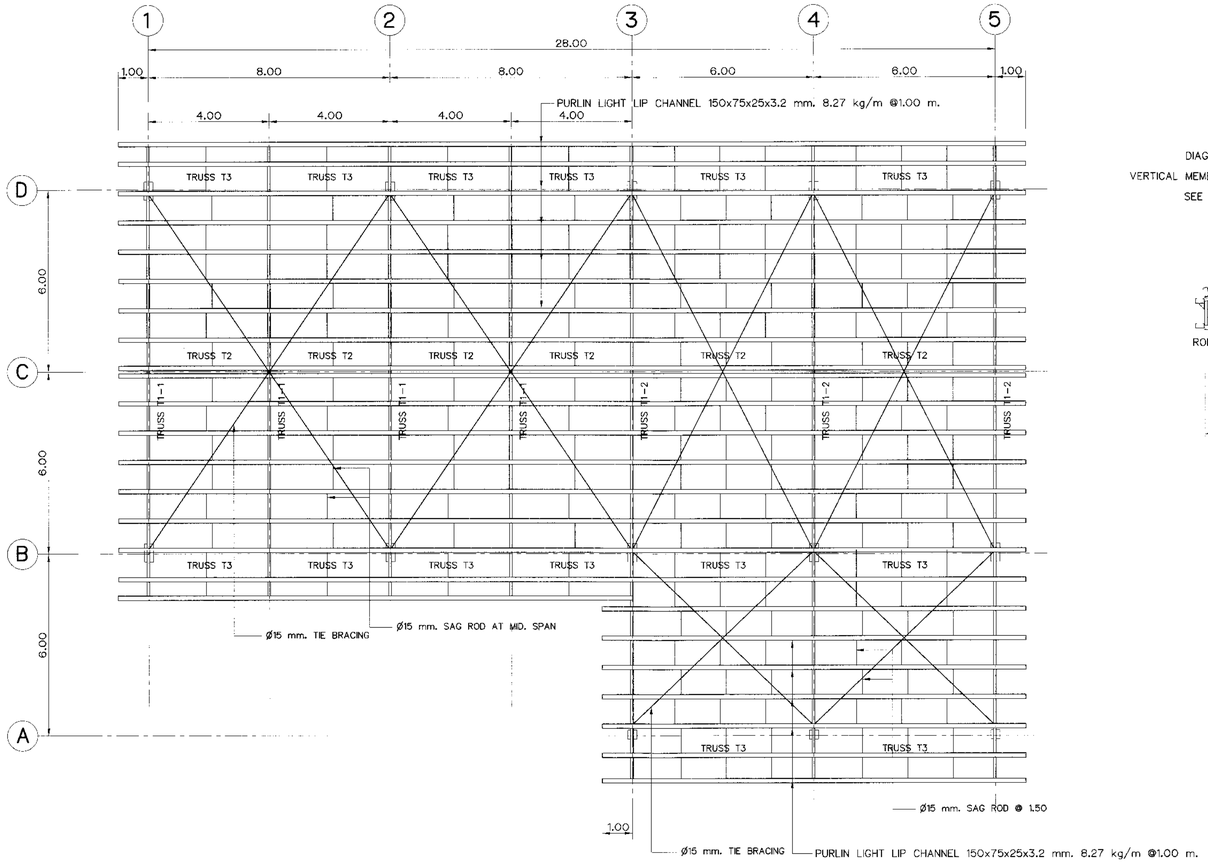

PLAN OF ROOF TRUSSES

SCALE 1:100

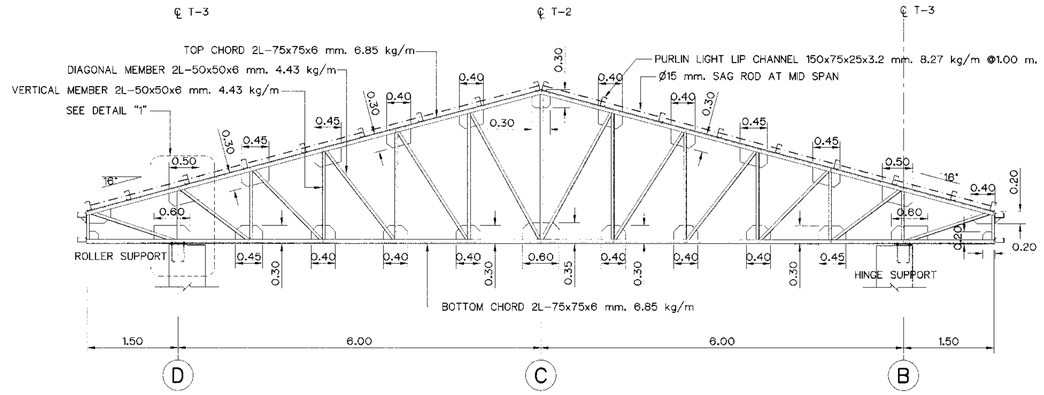

TRUSS T1-1

SCALE 1:50

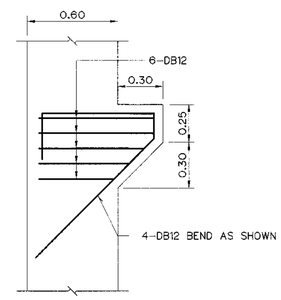

BRACKET DETAIL

SCALE 1:20

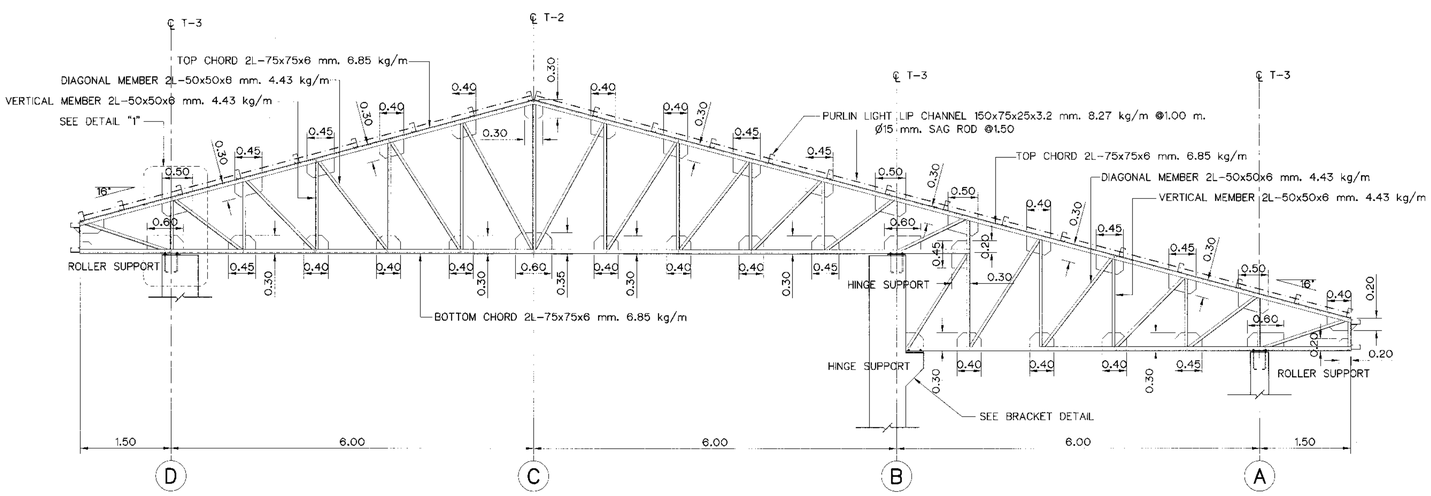

TRUSS T1-2

SCALE 1:50

0 0.5 1 2 3 4 METERS
SCALE 1:50

0 1 2 3 4 5 6 7 8 METERS
SCALE 1:100

NOTES :

1. ALL DIMENSIONS AND ELEVATIONS (M.S.L.) ARE IN METERS, UNLESS OTHERWISE SHOWN.
2. SYMBOLS, ABBREVIATIONS AND GENERAL NOTES SEE DWG. NO. KLP-GN-03

REFERENCE DRAWINGS :

1. POWERHOUSE, PLAN 1st FLOOR	KLP-PH-02
2. POWERHOUSE, PLAN OF SLAB AND DETAILS	KLP-PH-10
3. DETAILS TRUSS T-1 AND T-3 (1/2)	KLP-PH-13

NO.	DATE	REVISIONS	CHECKED	APPROVED
3				
2				
1				
	CONSULTANTS		DEDE	

KINGDOM OF THAILAND
Department of Alternative Energy Development and Efficiency
MINISTRY OF ENERGY

KLONG LAM PLOK HYDROPOWER PROJECT

CIVIL WORKS AND TRANSMISSION LINE
POWERHOUSE
ROOF BEAM AND TRUSS PLANS

P&C MANAGEMENT CO.,LTD.

Department of Alternative Energy Development and Efficiency
MINISTRY OF ENERGY

DESIGNED	วิชิต 29074	วิชิต 6226	REVIEWED
DRAWN			SUBMITTED
CHECKED	วิชิต 6226		RECOMMENDED
			APPROVED
PROJECT MANAGER	08/03/2559 DATE		DRAWING NO. KLP-PH-15
			SHEET NO. 87 OF 110

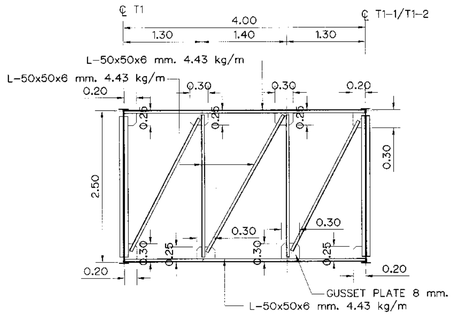

TRUSS T2 (SPAN 4.00m.)

SCALE 1:50

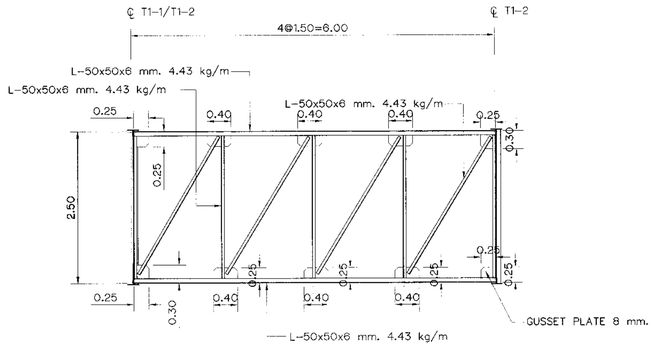

TRUSS T2 (SPAN 6.00m.)

SCALE 1:50

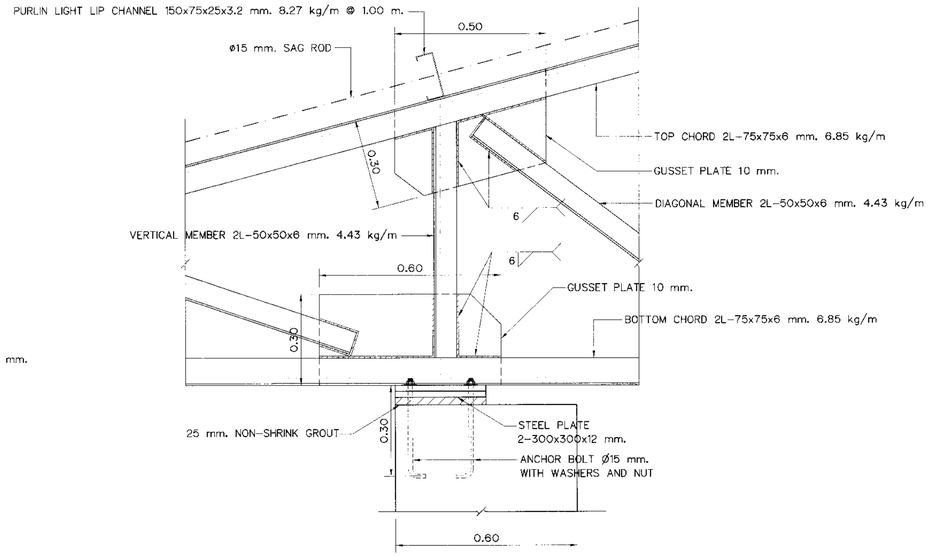

DETAILS "1" (ON COLUMN)

SCALE 1:20

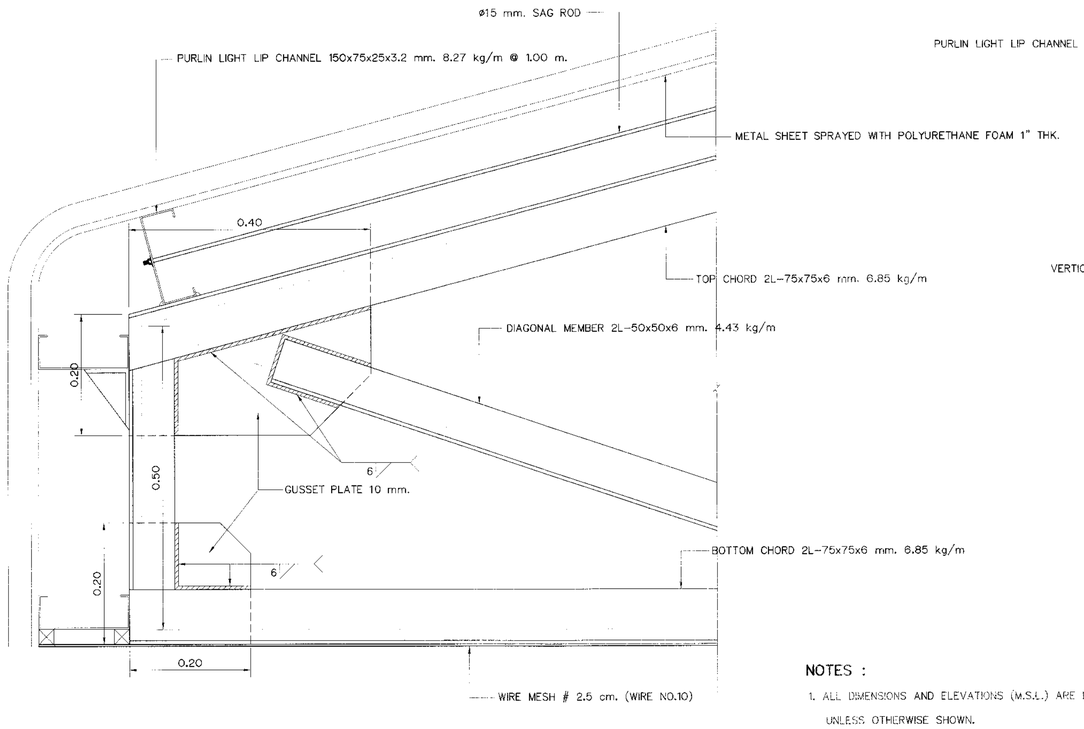

EAVES DETAIL

SCALE 1:10

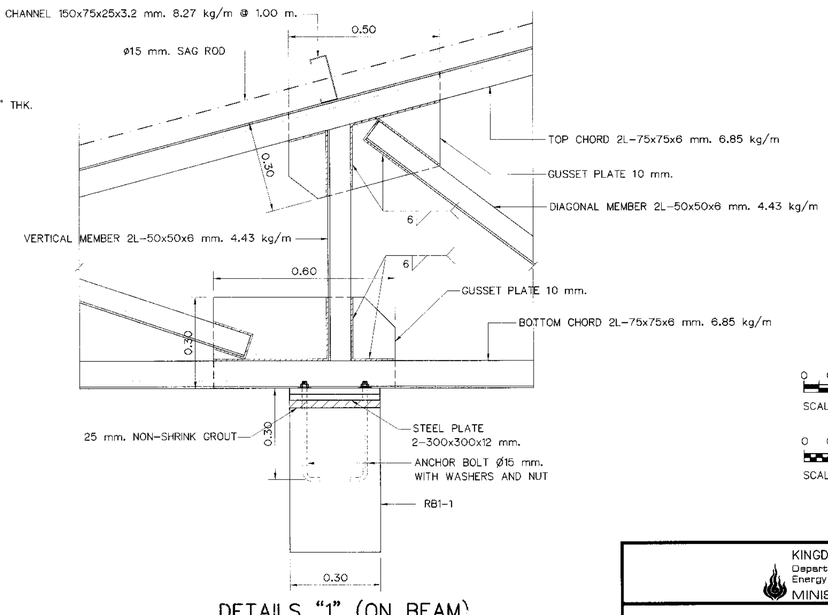

DETAILS "1" (ON BEAM)

SCALE 1:20

0 0.1 0.2 0.3 0.4 0.5 0.6 0.7 0.8

SCALE 1:10 METERS

0 0.5 1.0 2.0 3.0 2.5

SCALE 1:50 METERS

NOTES :

1. ALL DIMENSIONS AND ELEVATIONS (M.S.L.) ARE IN METERS, UNLESS OTHERWISE SHOWN.
2. SYMBOLS, ABBREVIATIONS AND GENERAL NOTES SEE DWG. NO. KLP-GN-03
3. WELDING CONNECTION USE 6 MM.,UNLESS OTHERWISE SHOWN

REFERENCE DRAWINGS :

1. ROOF BEAM AND TRUSS PLANS KLP-PH-15
2. TRUSS DETAIL (2/2) KLP-PH-17

NO.	DATE	REVISIONS	CHECKED	APPROVED
3				
2				
1				

CONSULTANTS DEDE

KINGDOM OF THAILAND
Department of Alternative Energy Development and Efficiency
MINISTRY OF ENERGY

KLONG LAM PLOK HYDROPOWER PROJECT

CIVIL WORKS AND TRANSMISSION LINE
POWERHOUSE
TRUSS DETAIL (1/2)

P&C MANAGEMENT CO.,LTD.

Department of Alternative Energy Development and Efficiency
MINISTRY OF ENERGY

DESIGNED ผศ.29074 ศ.ดร. ศส.6226
DRAWN
CHECKED ศ.ดร. ศส.6226
PROJECT MANAGER 08/03/2559 DATE

REVIEWED
SUBMITTED
RECOMMENDED
APPROVED P. Hansell

DRAWING NO. KLP-PH-16

SHEET NO. 88 OF 110

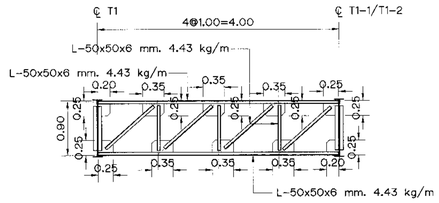

TRUSS T3 (SPAN 4.00m.)

SCALE 1:50

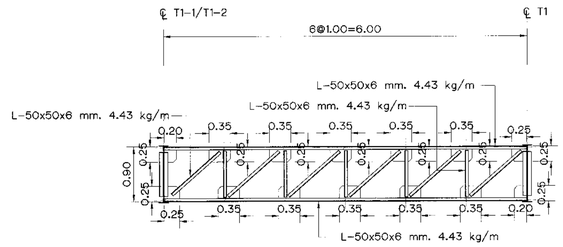

TRUSS T3 (SPAN 6.00m.)

SCALE 1:50

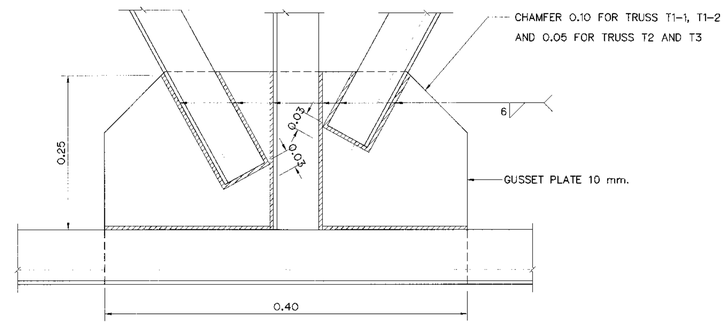

TYPICAL OF WELD DETAIL

SCALE 1:5

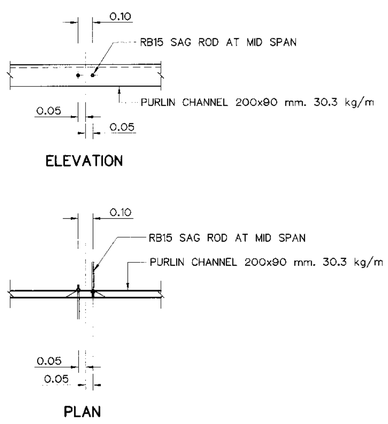

SAG ROD DETAILS

SCALE 1:20

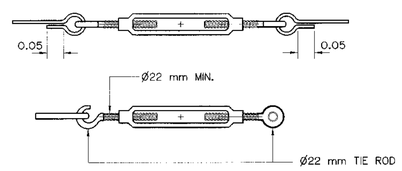

TURNBUCKLE

NOT TO SCALE

NOTES :

1. ALL DIMENSIONS AND ELEVATIONS (M.S.L.) ARE IN METERS, UNLESS OTHERWISE SHOWN.
2. SYMBOLS, ABBREVIATIONS AND GENERAL NOTES SEE DWG. NO. KLP-GN-03
3. WELDING CONNECTION USE 6 MM.,UNLESS OTHERWISE SHOWN

REFERENCE DRAWINGS :

1. ROOF BEAM AND TRUSS PLANS	KLP-PH-15
2. TRUSS DETAIL (1/2)	KLP-PH-16

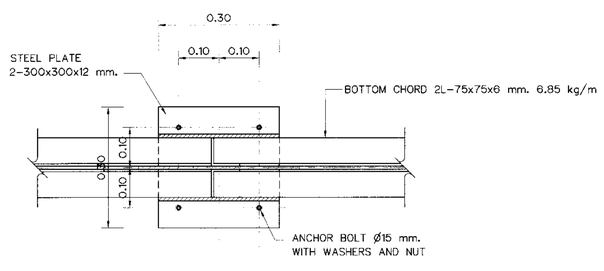

HINGE SUPPORT DETAIL

SCALE 1:15

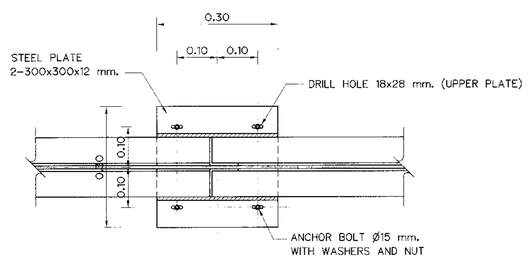

ROLLER SUPPORT DETAIL

SCALE 1:15

0 0.1 0.2 0.3 0.4 0.5 0.6 0.7 0.8
SCALE 1:10 METERS

0 0.5 1.2
SCALE 1:15 METERS

0 0.50 1.00 1.50
SCALE 1:20 METERS

NO.	DATE	REVISIONS	CHECKED	APPROVED
3				
2				
1				

CONSULTANTS | DEDE

KINGDOM OF THAILAND
Department of Alternative Energy Development and Efficiency
MINISTRY OF ENERGY

KLONG LAM PLOK HYDROPOWER PROJECT

CIVIL WORKS AND TRANSMISSION LINE
POWERHOUSE
TRUSS DETAIL (2/2)

P&C MANAGEMENT CO.,LTD.

DESIGNED REL.29074 REL.6226
DRAWN
CHECKED REL.6226
PROJECT MANAGER 08/03/2559 DATE

Department of Alternative Energy Development and Efficiency
MINISTRY OF ENERGY
REVIEWED
SUBMITTED
RECOMMENDED
APPROVED

DRAWING NO. KLP-PH-17
SHEET NO. 89 OF 110

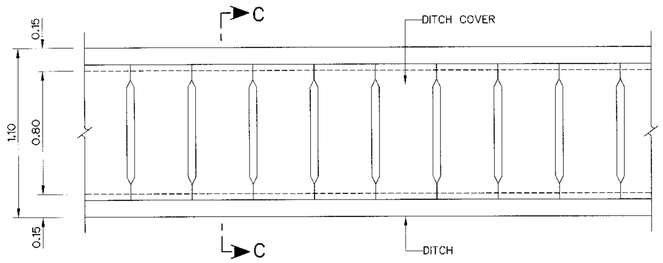

DITCH PLAN
NOT TO SCALE

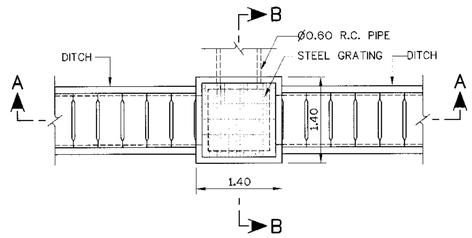

MANHOLE PLAN
NOT TO SCALE

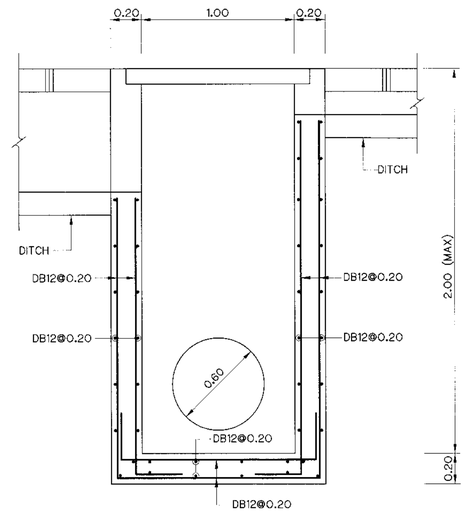

SECTION A–A (REINFORCEMENT DETAIL)
NOT TO SCALE

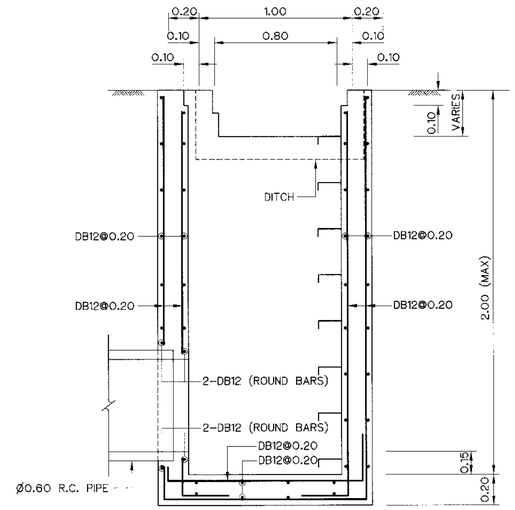

SECTION B–B (REINFORCEMENT DETAIL)
NOT TO SCALE

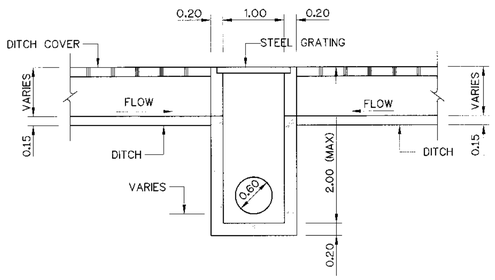

SECTION A–A
NOT TO SCALE

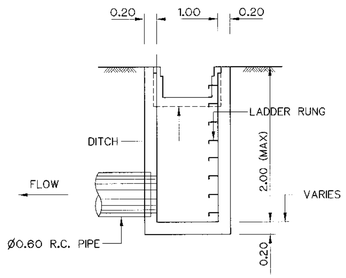

SECTION B–B
NOT TO SCALE

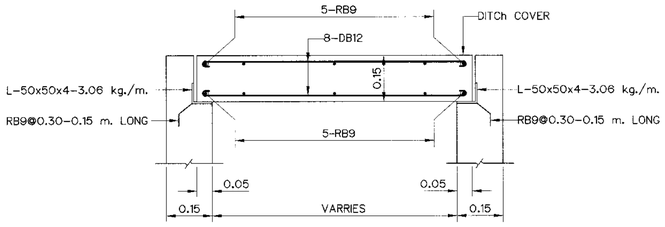

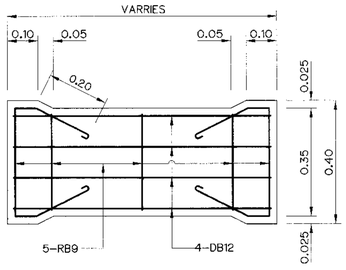

DITCH COVER DETAILS
NOT TO SCALE

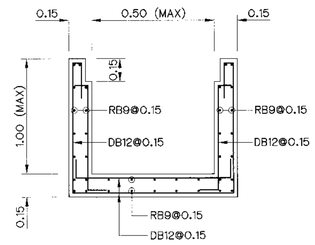

SECTION C–C
NOT TO SCALE

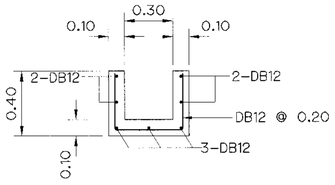

0.30 WIDTH DITCH DETAIL
NOT TO SCALE

NOTES :

1. ALL DIMENSIONS AND ELEVATIONS (M.S.L.) ARE IN METERS, UNLESS OTHERWISE SHOWN.
2. SYMBOLS, ABBREVIATIONS AND GENERAL NOTES SEE DWG. NO. KLP–GN–03

REFERENCE DRAWINGS :

1. POWERHOUSE, GENERAL LAY–OUT	KLP–PH–01
2. TAILRACE, SECTIONS AND DETAILS	KLP–TR–02

NO.	DATE	REVISIONS	CHECKED	APPROVED
3				
2				
1				
	CONSULTANTS		DEDE	

KINGDOM OF THAILAND
Department of Alternative Energy Development and Efficiency
MINISTRY OF ENERGY

KLONG LAM PLOK HYDROPOWER PROJECT

CIVIL WORKS AND TRANSMISSION LINE
POWERHOUSE
DITCH AND MANHOLE DETAILS

P&C MANAGEMENT CO.,LTD.

Department of Alternative Energy Development and Efficiency
MINISTRY OF ENERGY

DESIGNED	วิศ.29074	REVIEWED	
DRAWN		SUBMITTED	
CHECKED	วิศ.8226	RECOMMENDED	
		APPROVED	
PROJECT MANAGER	08/03/2559 DATE	DRAWING NO. KLP–PH–18	SHEET NO. 90 OF 110

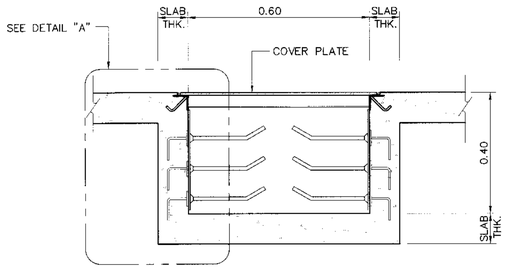

IN DOOR CABLE TRENCH

SCALE 1:10

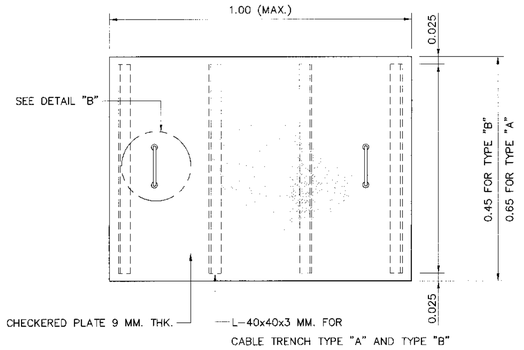

COVER PLATE FOR IN DOOR

SCALE 1:10

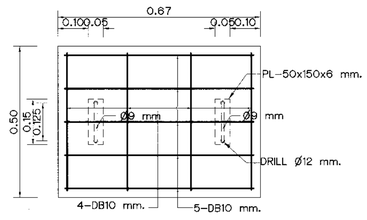

OUT DOOR COVER CABLE TRENCH

SCALE 1:5

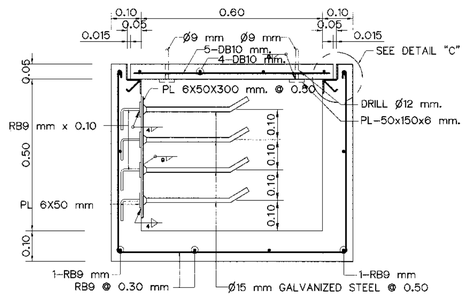

OUT DOOR CABLE TRENCH

SCALE 1:10

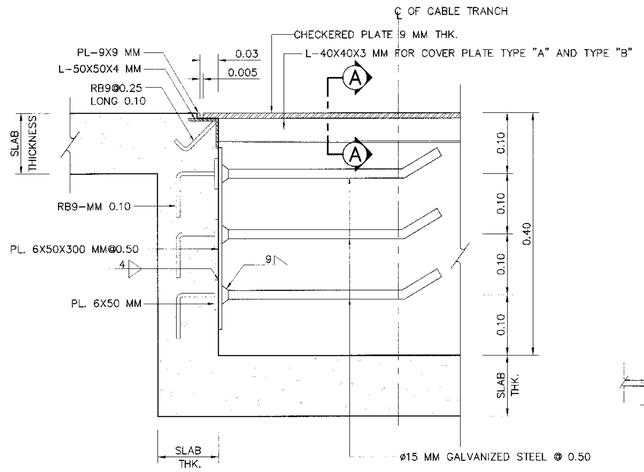

DETAIL "A"

SCALE 1:5

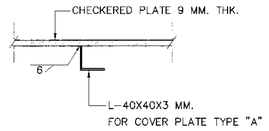

SECTION A-A

NOT TO SCALE

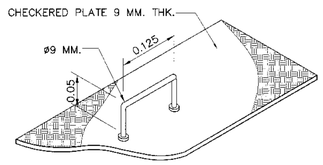

DETAIL "B"

NOT TO SCALE

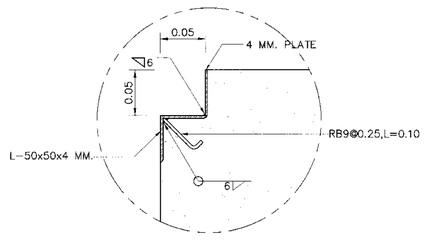

DETAIL "C"

NOT TO SCALE

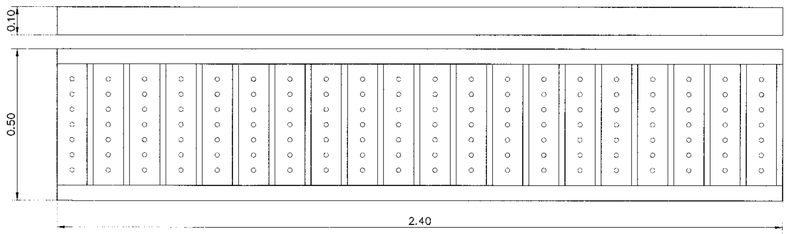

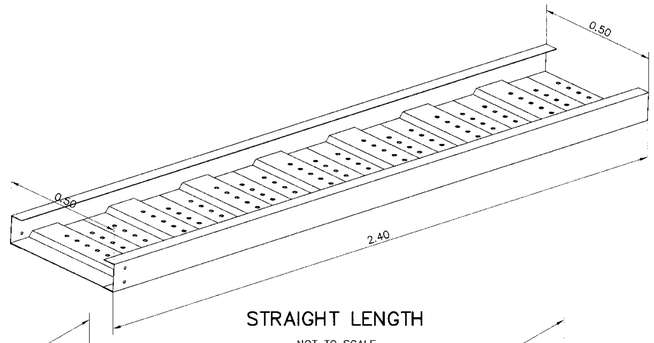

STRAIGHT LENGTH

NOT TO SCALE

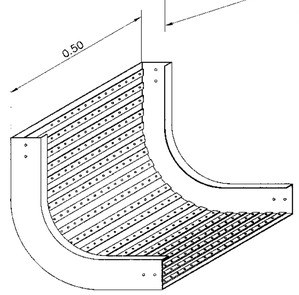

OUTSIDE VERTICAL RISERS

NOT TO SCALE

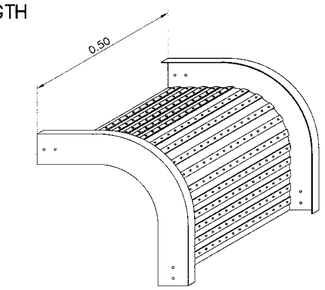

INSIDE VERTICAL RISERS

NOT TO SCALE

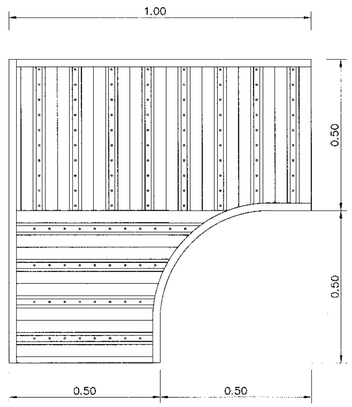

HORIZONTAL 90 ELBOWS

NOT TO SCALE

CABLE TRAY DETAIL

NOT TO SCALE

MATERIALS : SHEET STEEL 1.5MM.
SURFACE FINISH : POWDER
COATED IN TEXTURED RAL
7032 OR HOT-DIP GALVANIZED
(UPON YOU REQUIREMENTS)
ASSEMBLY : WELDING METHOD
APPLICATION : USING FOR INDOOR & OUTDOOR INSTALLATION WORK

NOTES :

1. ALL DIMENSIONS AND ELEVATIONS ARE IN METERS, REINFORCEMENT BARS ARE IN MILLIMETERS, UNLESS OTHERWISE SHOWN.
2. SYMBOLS, ABBREVIATIONS AND GENERAL NOTES SEE DWG. NO. KLP-GN-03.
3. STEEL COVER FOR IN DOOR TRENCH SHALL BE COATED WITH NON BLEEDING TYPE COAL TAR EPOXY.

REFERENCE DRAWINGS :

1. POWERHOUSE, GENERAL LAY-OUT KLP-PH-01
2. POWERHOUSE, PLAN 1st FLOOR KLP-PH-02

NO.	DATE	REVISIONS	CHECKED	APPROVED
3				
2				
1				

CONSULTANTS — DEDE

KINGDOM OF THAILAND
Department of Alternative Energy Development and Efficiency
MINISTRY OF ENERGY

KLONG LAM PLOK HYDROPOWER PROJECT

CIVIL WORKS AND TRANSMISSION LINE
POWERHOUSE
CABLE TRENCH DETAILS

P&C MANAGEMENT CO.,LTD.

Department of Alternative Energy Development and Efficiency
MINISTRY OF ENERGY

DESIGNED ภัทร.29074 สิน.6226
DRAWN
CHECKED สิน.6226
PROJECT MANAGER 08/03/2559 DATE

REVIEWED
SUBMITTED
RECOMMENDED
APPROVED

DRAWING NO. KLP-PH-19
SHEET NO. 91 OF 110

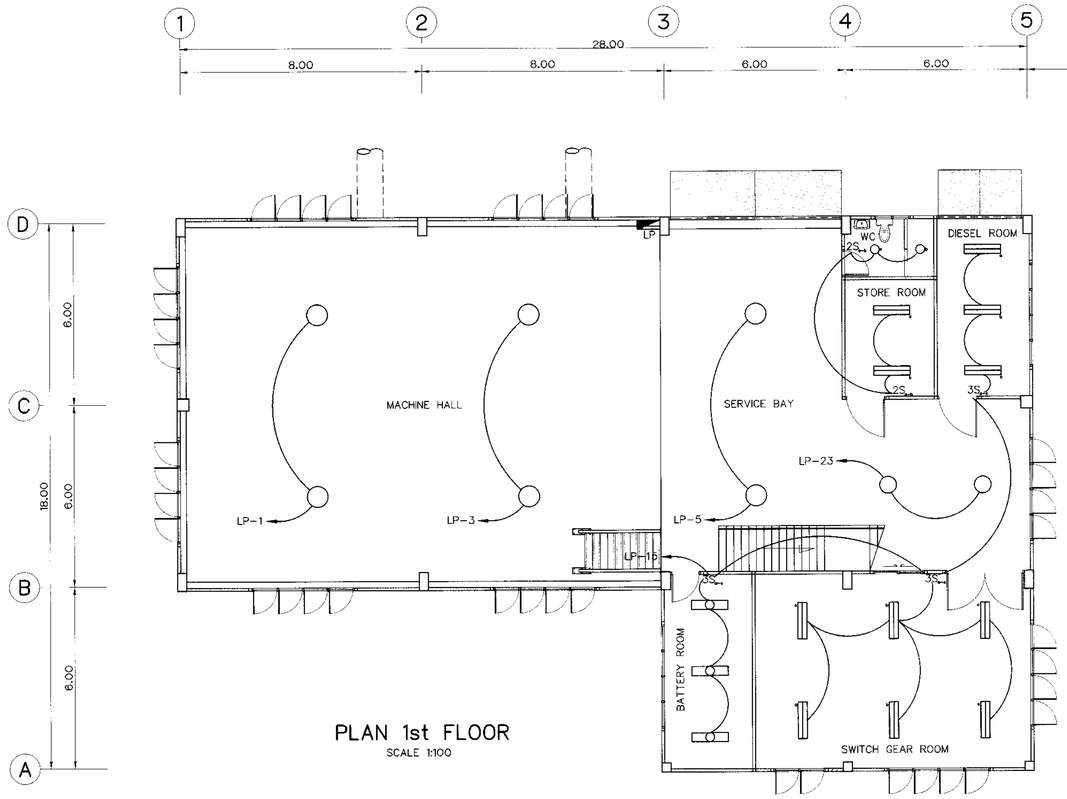

PLAN 1st FLOOR
SCALE 1:100

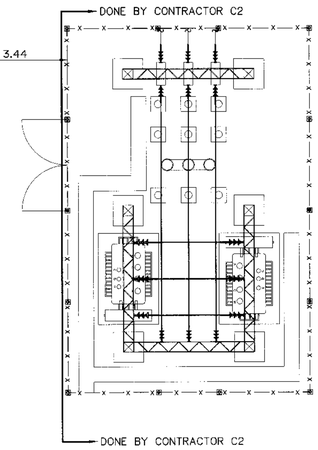

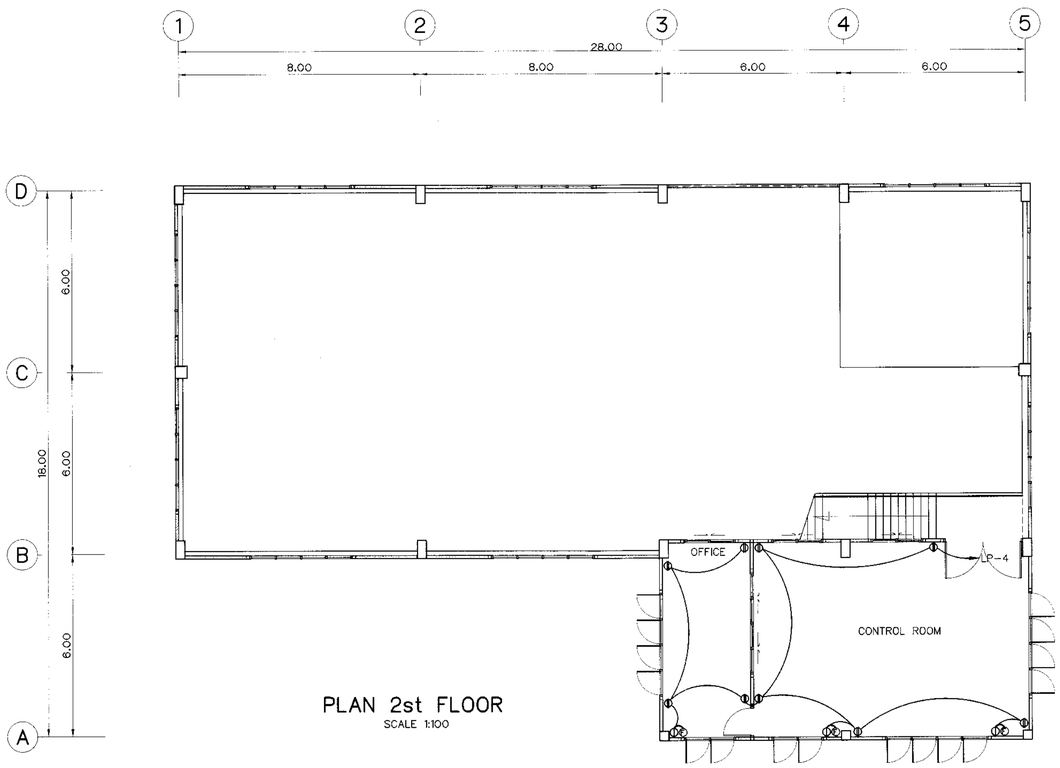

PLAN 2st FLOOR
SCALE 1:100

LEGENDS :

- 2x36 W. FLUORESCENT LAMP (HANGING OR CEILING TYPE) WITH BALLAST LOW LOSS, CAPACITOR AND STARTOR AT SWITCH "a"
- 2x36 W. FLUORESCENT LAMP (CORROSION PROOF) WITH BALLAST LOW LOSS, CAPACITOR AND STARTOR
- 1x36 W. FLUORESCENT LAMP (HANGING CEILING TYPE) WITH BALLAST LOW LOSS, CAPACITOR AND STARTOR, AT SWITCH "a"
- 1x20 W. COMPACT FLUORESCENT (WALL TYPE, OUTDOOR IP54)
- $3S_{a-c}$ SWITCH "3" SETS FOR SWITCH "a" TO "c"
- S" TWO-WAYS SWITCH
- SIMPLEX RECEPTACLE WITH GROUND, 10 A. 220 VAC.
- 20 W. COMPACT FLUORESCENT
- (F) EXHAUST FAN 12"
- OUTDOOR BOLLARD TYPE WITH 20 W. COMPACT FLUORESCENT
- DUPLEX RECEPTACLE WITH GROUND, 10 A. 220 VAC.
- POWER RECEPCTACLE 3P+N+E 32 A. 400 VAC.
- HIGH BAY FIXTURE 1x400 W. HIGH PRESSURE SODIUM
- HIGH BAY FIXTURE 1x250 W. HIGH PRESSURE SODIUM
- EMERGENCY LIGHTING 2x55 W. HALOGEN W/SEALED LEAD ACID BATTERY BACKUP 2 HOURS
- A/C AIR CONDITIONING, SPLIT TYPE
- LP LOAD PANEL 3 PHASE (18 CIRCUITS) WITH MAIN CIRCUIT BREAKER
- LCP1 LIGHTING CONTROL PANEL
- SECONDARY LINES, 380/220 V 50 MM THW OVERHEAD INSULATED CABLES, 3Ø 4 WIRE
- UNDERGROUND WIRING IN CONDUIT

NO.	DATE	REVISIONS	CHECKED	APPROVED
3				
2				
1				
	CONSULTANTS		DEDE	

KINGDOM OF THAILAND
Department of Alternative Energy Development and Efficiency
MINISTRY OF ENERGY

KLONG LAM PLOK HYDROPOWER PROJECT

CIVIL WORKS AND TRANSMISSION LINE
POWERHOUSE
ELECTRIC AND LIGHTING SYSTEMS (SHEET 1/4)

P&C MANAGEMENT CO.,LTD.

Department of Alternative Energy Development and Efficiency
MINISTRY OF ENERGY

DESIGNED	2พ.ค.604	REVIEWED	
DRAWN		SUBMITTED	
		RECOMMENDED	
CHECKED	2พ.ค.604	APPROVED	P. Hanwell
PROJECT MANAGER	08/03/2559 DATE	DRAWING NO. KLP-PH-20	SHEET NO. 92 OF 110

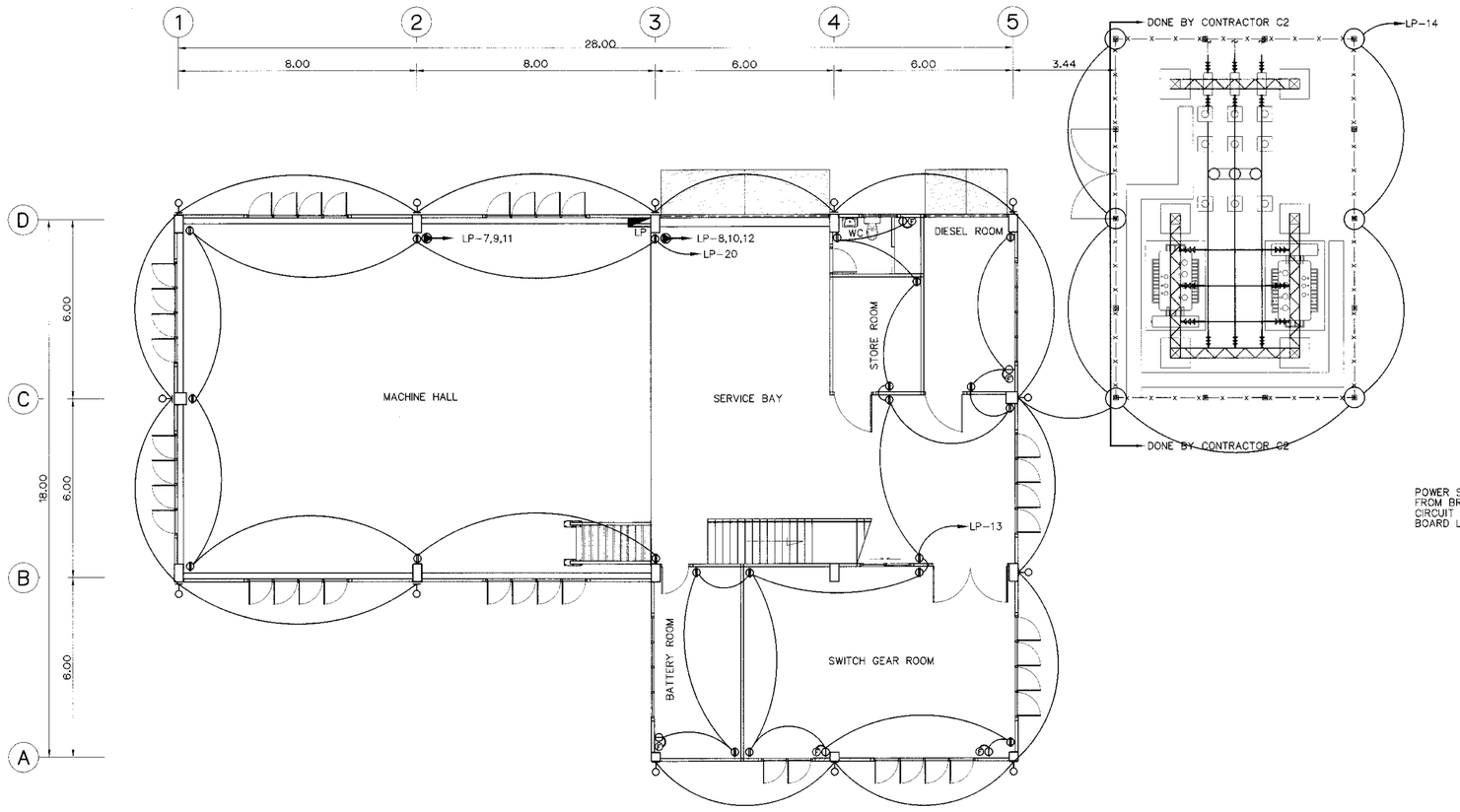

PLAN 1st FLOOR

SCALE 1:100

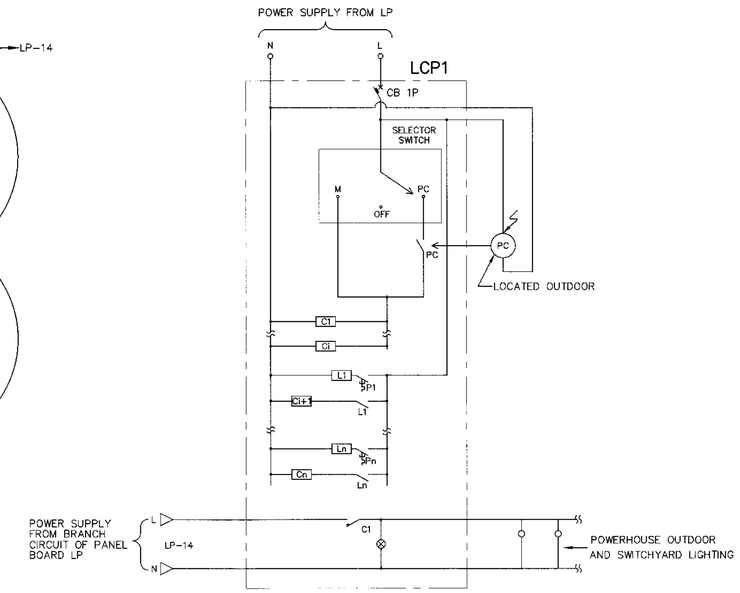

LIGHTING CONTROL PANEL(LCP1) DIAGRAM

LEGEND :

- PC = PHOTO CELL
- PC = PHOTO CELL SWITCH CONTACT
- Cn = MAGNETIC CONTACTOR n : 1, 2, 3...
- Ln = LATCHING CONTACTOR n : 1, 2, 3...
- Pn = PUSH BUTTON SWITCH, NON-LATCHED TYPE
- Cn = MAGNETIC RELAY n : 1, 2, 3...
- Ln = LATCHING RELAY n : 1, 2, 3...

LEGENDS :

- 2x36 W. FLUORESCENT LAMP (HANGING OR CEILING TYPE) WITH BALLAST LOW LOSS, CAPACITOR AND STARTOR AT SWITCH "a"
- 2x36 W. FLUORESCENT LAMP (CORROSION PROOF) WITH BALLAST LOW LOSS, CAPACITOR AND STARTOR
- 1x36 W. FLUORESCENT LAMP (HANGING CEILING TYPE) WITH BALLAST LOW LOSS, CAPACITOR AND STARTOR, AT SWITCH "a"
- 1x20 W. COMPACT FLUORESCENT (WALL TYPE, OUTDOOR IP54)
- 3S a-c SWITCH "3" SETS FOR SWITCH "a" TO "c"
- S" TWO-WAYS SWITCH
- SIMPLEX RECEPTACLE WITH GROUND, 10 A. 220 VAC.
- 20 W. COMPACT FLUORESCENT
- EXHAUST FAN 12"
- OUTDOOR BOLLARD TYPE WITH 20 W. COMPACT FLUORESCENT
- DUPLEX RECEPTACLE WITH GROUND, 10 A. 220 VAC.
- POWER RECEPCTACLE 3P+N+E 32 A. 400 VAC.
- HIGH BAY FIXTURE 1x400 W. HIGH PRESSURE SODIUM
- HIGH BAY FIXTURE 1x250 W. HIGH PRESSURE SODIUM
- EMERGENCY LIGHTING 2x55 W. HALOGEN W/SEALED LEAD ACID BATTERY BACKUP 2 HOURS
- A/C AIR CONDITIONING, SPLIT TYPE
- LP LOAD PANEL 3 PHASE (18 CIRCUITS) WITH MAIN CIRCUIT BREAKER
- LCP1 LIGHTING CONTROL PANEL
- SECONDARY LINES, 380/220 V 50 MM THW OVERHEAD INSULATED CABLES, 3Ø 4 WIRE
- UNDERGROUND WIRING IN CONDUIT

NO.	DATE	REVISIONS	CHECKED	APPROVED
3				
2				
1				
	CONSULTANTS		DEDE	

KINGDOM OF THAILAND
Department of Alternative Energy Development and Efficiency
MINISTRY OF ENERGY

KLONG LAM PLOK HYDROPOWER PROJECT

CIVIL WORKS AND TRANSMISSION LINE
POWERHOUSE
ELECTRIC AND LIGHTING SYSTEMS (SHEET 2/4)

P&C MANAGEMENT CO.,LTD.

Department of Alternative Energy Development and Efficiency
MINISTRY OF ENERGY

DESIGNED	2W0.604	REVIEWED	
DRAWN		SUBMITTED	
CHECKED	2W0.604	RECOMMENDED	
PROJECT MANAGER	08/03/2559 DATE	APPROVED	P. Hanson

DRAWING NO. KLP-PH-21

SHEET NO. 93 OF 110

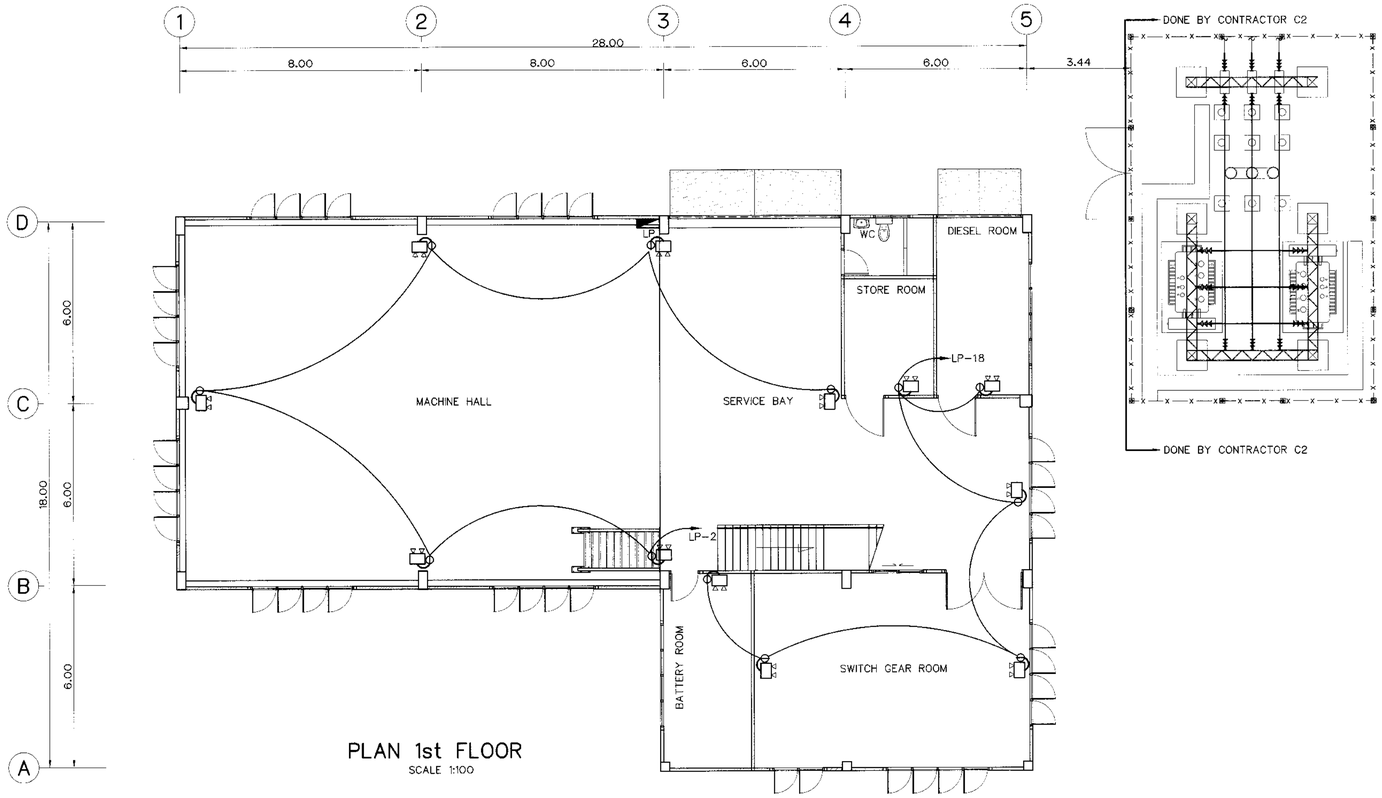

PLAN 1st FLOOR
SCALE 1:100

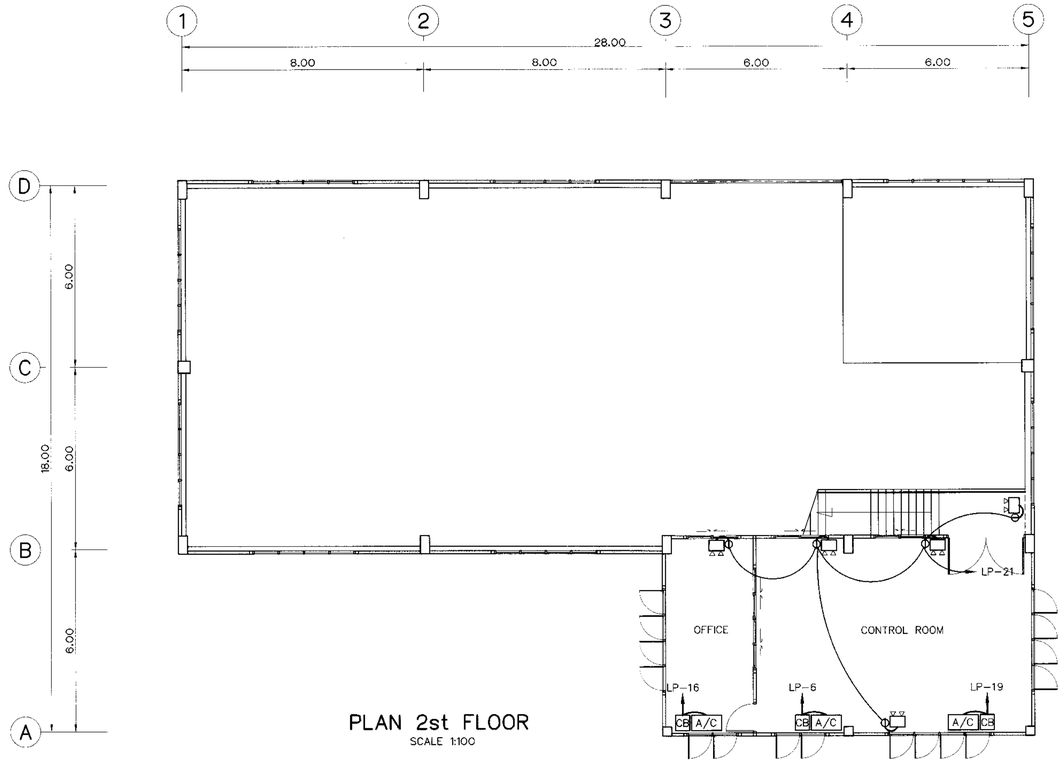

PLAN 2st FLOOR
SCALE 1:100

LEGENDS :

- 2x36 W. FLUORESCENT LAMP (HANGING OR CEILING TYPE) WITH BALLAST LOW LOSS, CAPACITOR AND STARTOR AT SWITCH "a"
- 2x36 W. FLUORESCENT LAMP (CORROSION PROOF) WITH BALLAST LOW LOSS, CAPACITOR AND STARTOR
- 1x36 W. FLUORESCENT LAMP (HANGING CEILING TYPE) WITH BALLAST LOW LOSS, CAPACITOR AND STARTOR, AT SWITCH "a"
- 1x20 W. COMPACT FLUORESCENT (WALL TYPE, OUTDOOR IP54)
- $3S_{a-c}$ SWITCH "3" SETS FOR SWITCH "a" TO "c"
- S" TWO-WAYS SWITCH
- SIMPLEX RECEPTACLE WITH GROUND, 10 A. 220 VAC.
- 20 W. COMPACT FLUORESCENT
- EXHAUST FAN 12"
- OUTDOOR BOLLARD TYPE WITH 20 W. COMPACT FLUORESCENT
- DUPLEX RECEPTACLE WITH GROUND, 10 A. 220 VAC.
- POWER RECEPCTACLE 3P+N+E 32 A. 400 VAC.
- HIGH BAY FIXTURE 1x400 W. HIGH PRESSURE SODIUM
- HIGH BAY FIXTURE 1x250 W. HIGH PRESSURE SODIUM
- EMERGENCY LIGHTING 2x55 W. HALOGEN W/SEALED LEAD ACID BATTERY BACKUP 2 HOURS
- A/C AIR CONDITIONING, SPLIT TYPE
- LP LOAD PANEL 3 PHASE (18 CIRCUITS) WITH MAIN CIRCUIT BREAKER
- LCP1 LIGHTING CONTROL PANEL
- SECONDARY LINES, 380/220 V 50 MM THW OVERHEAD INSULATED CABLES, 3Ø 4 WIRE
- UNDERGROUND WIRING IN CONDUIT

NO.	DATE	REVISIONS	CHECKED	APPROVED
3				
2				
1				
	CONSULTANTS		DEDE	

KINGDOM OF THAILAND
Department of Alternative Energy Development and Efficiency
MINISTRY OF ENERGY

KLONG LAM PLOK HYDROPOWER PROJECT

CIVIL WORKS AND TRANSMISSION LINE
POWERHOUSE
ELECTRIC AND LIGHTING SYSTEMS (SHEET 3/4)

P&C MANAGEMENT CO.,LTD.

Department of Alternative Energy Development and Efficiency
MINISTRY OF ENERGY

DESIGNED	2พ.ค.604	REVIEWED	
DRAWN		SUBMITTED	
CHECKED	2พ.ค.604	RECOMMENDED	
PROJECT MANAGER	08/03/2559 DATE	APPROVED	

DRAWING NO. KLP-PH-22

SHEET NO. 94 OF 110

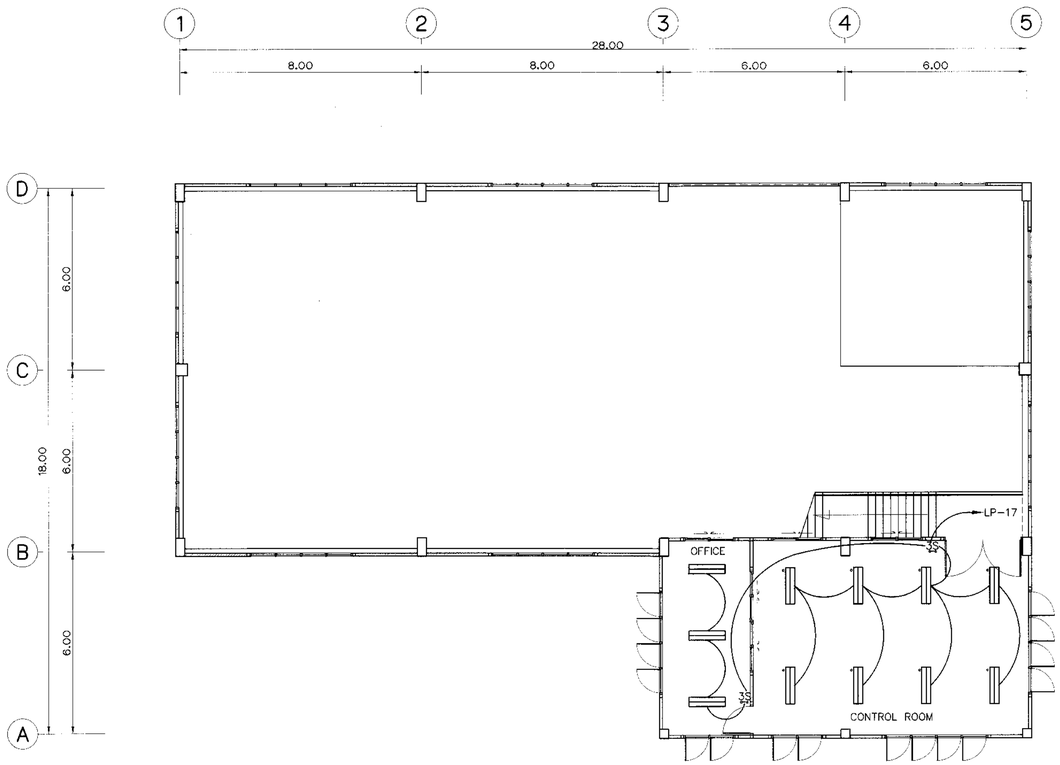

PLAN 2st FLOOR

SCALE 1:100

LOAD SCHEDULE OF PANEL BOARD 3Ph 400V 50Hz

PANEL NO.LP — LOCATION : POWERHOUSE

CCT No.	DESCRIPTION	LOAD IN VA R	LOAD IN VA S	LOAD IN VA T	CIRCUIT BREAKER P	CIRCUIT BREAKER AT	CIRCUIT BREAKER AF	CIRCUIT BREAKER kA.
LP-1	MACHINE HALL LIGHTING 1 (250W HIGHBAY LUMINAIRE)	600			1	10	60	10
LP-3	MACHINE HALL LIGHTING 2 (250W HIGHBAY LUMINAIRE)		600		1	10	60	10
LP-5	SERVICE BAY LIGHTING (250W HIGHBAY LUMINAIRE)			600	1	10	60	10
LP-7	MACHINE HALL POWER RECEPTACLE 1	2,309						
LP-9	MACHINE HALL POWER RECEPTACLE 1		2,309		3	16	60	10
LP-11	MACHINE HALL POWER RECEPTACLE 1			2,309				
LP-13	THE FIRST FLOOR RECEPTACLE	3,800			1	25	60	10
LP-15	THE FIRST FLOOR LIGHTING		1,330		1	10	60	10
LP-17	THE SECOND FLOOR LIGHTING			880	1	10	60	10
LP-19	CONTROL ROOM AIR CONDITION NO.2 36,000 BTU/HR	4,250			1	25	60	10
LP-21	THE SECOND FLOOR EMERGENCY LIGHTING		1,000		1	10	60	10
LP-23	INDOOR HALL AREA LIGHTING (150W HIGHBAY LUMINAIRE)			400	1	10	60	10
LP-2	MACHINE HALL EMERGENCY LIGHTING	1,200			1	10	60	10
LP-4	THE SECOND FLOOR RECEPTACLE		2,400		1	16	60	10
LP-6	CONTROL ROOM AIR CONDITION NO.1 36,000 BTU/HR			4,250	1	25	60	10
LP-8	MACHINE HALL POWER RECEPTACLE 2	2,309						
LP-10	MACHINE HALL POWER RECEPTACLE 2		2,309		3	16	60	10
LP-12	MACHINE HALL POWER RECEPTACLE 2			2,309				
LP-14	OUTDOOR LIGHTING	475			1	10	60	10
LP-16	OFFICE ROOM AIR CONDITION 24,000 BTU/HR		2,295		1	16	60	10
LP-18	THE FIRST FLOOR EMERGENCY LIGHTING			1,200	1	10	60	10
LP-20	MACHINE HALL RECEPTACLE	1,400			1	10	60	10
LP-22	SPARE		4,600		1	25	60	10
LP-24	SPARE			4,600	1	25	60	10
	TOTAL LOAD IN VA	16,343	16,843	16,548	3	100	250	25
			49,734					

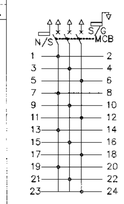

LEGENDS :

- 2x36 W. FLUORESCENT LAMP (HANGING OR CEILING TYPE) WITH BALLAST LOW LOSS, CAPACITOR AND STARTOR AT SWITCH "a"
- 2x36 W. FLUORESCENT LAMP (CORROSION PROOF) WITH BALLAST LOW LOSS, CAPACITOR AND STARTOR
- 1x36 W. FLUORESCENT LAMP (HANGING CEILING TYPE) WITH BALLAST LOW LOSS, CAPACITOR AND STARTOR, AT SWITCH "a"
- 1x20 W. COMPACT FLUORESCENT (WALL TYPE, OUTDOOR IP54)
- 3S a-c — SWITCH "3" SETS FOR SWITCH "a" TO "c"
- S" — TWO-WAYS SWITCH
- SIMPLEX RECEPTACLE WITH GROUND, 10 A. 220 VAC.
- 20 W. COMPACT FLUORESCENT
- F — EXHAUST FAN 12"
- OUTDOOR BOLLARD TYPE WITH 20 W. COMPACT FLUORESCENT
- DUPLEX RECEPTACLE WITH GROUND, 10 A. 220 VAC.
- POWER RECEPCTACLE 3P+N+E 32 A. 400 VAC.
- HIGH BAY FIXTURE 1x400 W. HIGH PRESSURE SODIUM
- HIGH BAY FIXTURE 1x250 W. HIGH PRESSURE SODIUM
- EMERGENCY LIGHTING 2x55 W. HALOGEN W/SEALED LEAD ACID BATTERY BACKUP 2 HOURS
- A/C — AIR CONDITIONING, SPLIT TYPE
- LP — LOAD PANEL 3 PHASE (18 CIRCUITS) WITH MAIN CIRCUIT BREAKER
- LCP1 — LIGHTING CONTROL PANEL
- SECONDARY LINES, 380/220 V 50 MM THW OVERHEAD INSULATED CABLES, 3Ø 4 WIRE
- UNDERGROUND WIRING IN CONDUIT

NO.	DATE	REVISIONS	CHECKED	APPROVED
3				
2				
1				

CONSULTANTS — DEDE

KINGDOM OF THAILAND
Department of Alternative Energy Development and Efficiency
MINISTRY OF ENERGY

KLONG LAM PLOK HYDROPOWER PROJECT

CIVIL WORKS AND TRANSMISSION LINE
POWERHOUSE
ELECTRIC AND LIGHTING SYSTEMS (SHEET 4/4)

P&C MANAGEMENT CO.,LTD.

Department of Alternative Energy Development and Efficiency
MINISTRY OF ENERGY

DESIGNED — 2Wn.604
DRAWN
CHECKED — 2Wn.604
PROJECT MANAGER — 08/03/2559 DATE

REVIEWED
SUBMITTED
RECOMMENDED
APPROVED

DRAWING NO. KLP-PH-23

SHEET NO. 95 OF 110

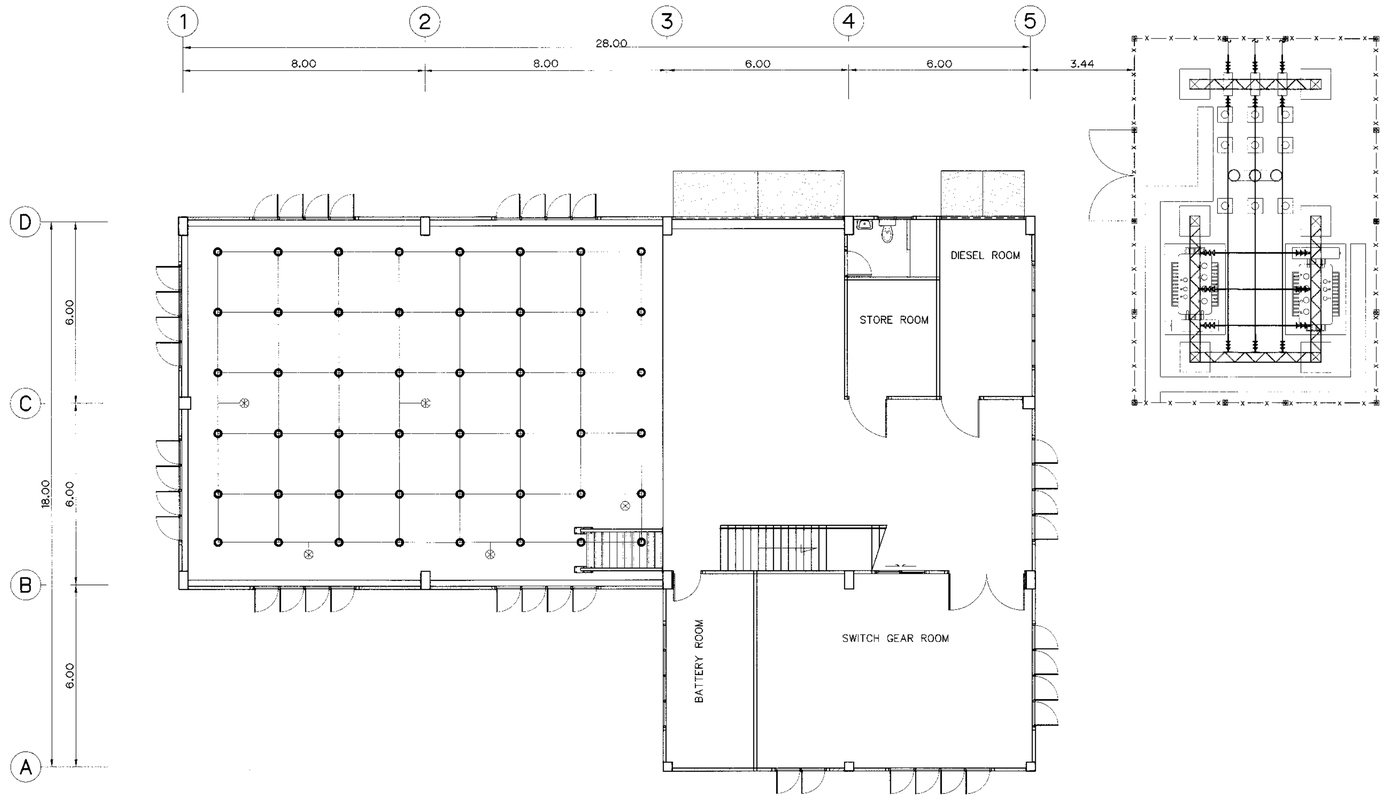

PLAN 1st FLOOR
SCALE 1:100

LEGENDS :

- GROUND ROD
- GROUND POINT FOR POWER PLANT EQUIPMENT GROUNDING
- BARE CUPPER CONDUCTOR

NOTE

1. GROUNDING SYSTEM DONE BY CONTRACTOR C2
2. GROUNDING CONDUCTOR, TAP AND RISER FROM GROUNDING NETWORK TO POWER EQUIPMENT SHALL BE FORMED BY BARE COPPER CONDUCTOR NOT LESS THAN 95 SQ.MM.
3. GROUNDING SYSTEM RESISTANCE WILL NOT EXCEED 5 OHM.
4. CONNECTOR TO WITH IN & BETWEEN THE GROUNDING NETWORK TO POWER PLANT EQUIPMENT WILL BE MADE BY THERMAL CADWELD
5. GROUND ROD WILL BE COPPER COVER STEEL DIAMETER 15.87 MM. 2,400 MM. LONG
6. THIS DRAWING USE FOR GUIDE ONLY

NO.	DATE	REVISIONS	CHECKED	APPROVED
3				
2				
1				
	CONSULTANTS		DEDE	

KINGDOM OF THAILAND
Department of Alternative Energy Development and Efficiency
MINISTRY OF ENERGY

KLONG LAM PLOK HYDROPOWER PROJECT

CIVIL WORKS AND TRANSMISSION LINE
POWERHOUSE
GROUNDING SYSTEMS

P&C MANAGEMENT CO.,LTD.

Department of Alternative Energy Development and Efficiency
MINISTRY OF ENERGY

DESIGNED	2W0.604	REVIEWED	
DRAWN		SUBMITTED	
CHECKED	2W0.604	RECOMMENDED	
PROJECT MANAGER	08/03/2559 DATE	APPROVED	
		DRAWING NO. KLP-PH-24	SHEET NO. 96 OF 110

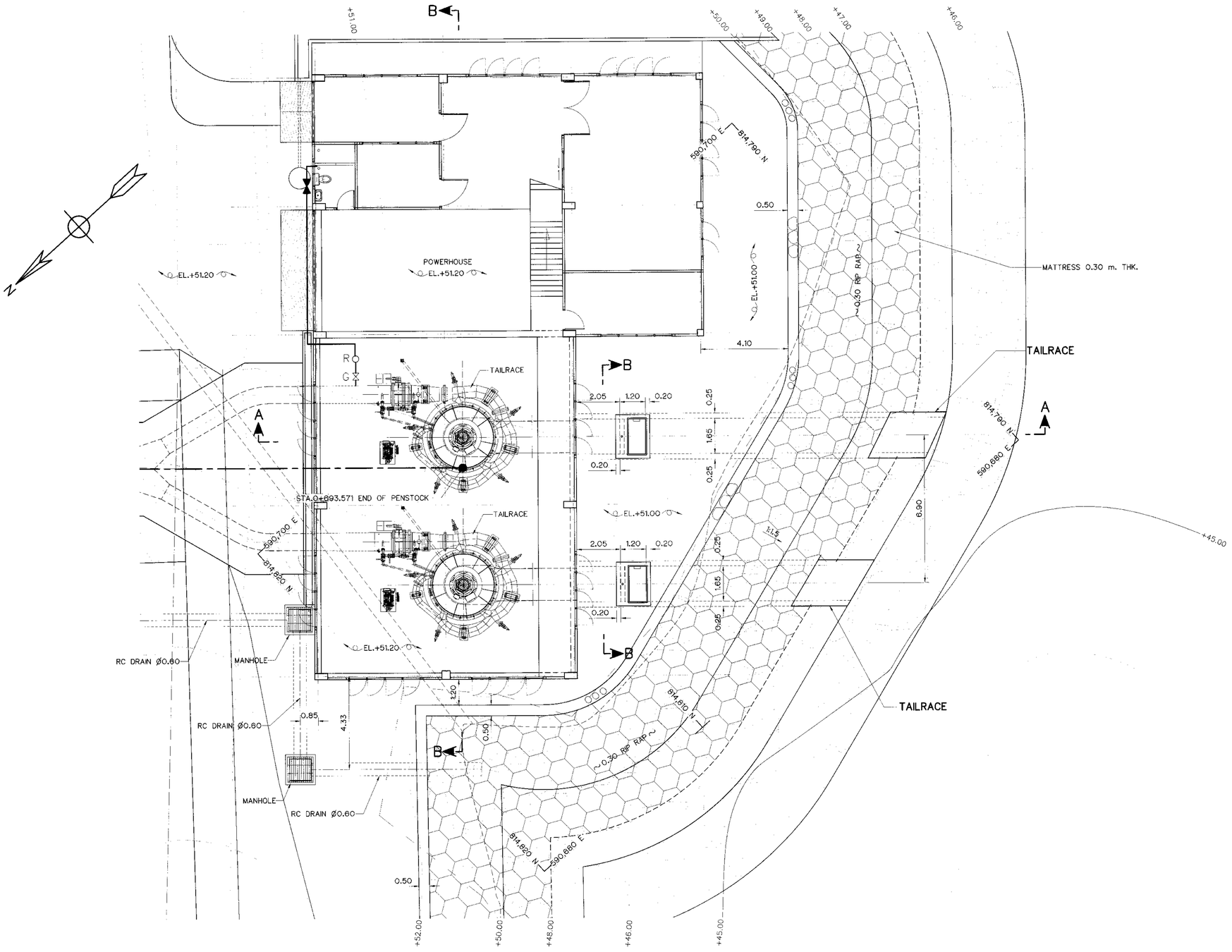

GENERAL LAY-OUT

SCALE 1:100

NOTES :

1. ALL DIMENSIONS AND ELEVATIONS (M.S.L.) ARE IN METERS, UNLESS OTHERWISE SHOWN.
2. SYMBOLS, ABBREVIATIONS AND GENERAL NOTES SEE DWG. NO. KLP-GN-03

REFERENCE DRAWINGS :

1. TAILRACE, SECTIONS AND DETAILS	KLP-TR-02
2. TAILRACE, REINFORCEMENT DETAILS	KLP-TR-03
3. POWERHOUSE, DITCH AND MANHOLE DETAILS	KLP-PH-18

0 1 2 4 6 8

SCALE 1:100 METERS

NO.	DATE	REVISIONS	CHECKED	APPROVED
3				
2				
1				

CONSULTANTS DEDE

KINGDOM OF THAILAND
Department of Alternative Energy Development and Efficiency
MINISTRY OF ENERGY

KLONG LAM PLOK HYDROPOWER PROJECT

CIVIL WORKS AND TRANSMISSION LINE

TAILRACE

GENERAL LAY-OUT

P&C MANAGEMENT CO.,LTD.

DESIGNED #B.29074 #B.6226
DRAWN
CHECKED #B.6226
PROJECT MANAGER 08/03/2559 DATE

Department of Alternative Energy Development and Efficiency
MINISTRY OF ENERGY

REVIEWED
SUBMITTED
RECOMMENDED
APPROVED

DRAWING NO. KLP-TR-01

SHEET NO. 97 OF 110

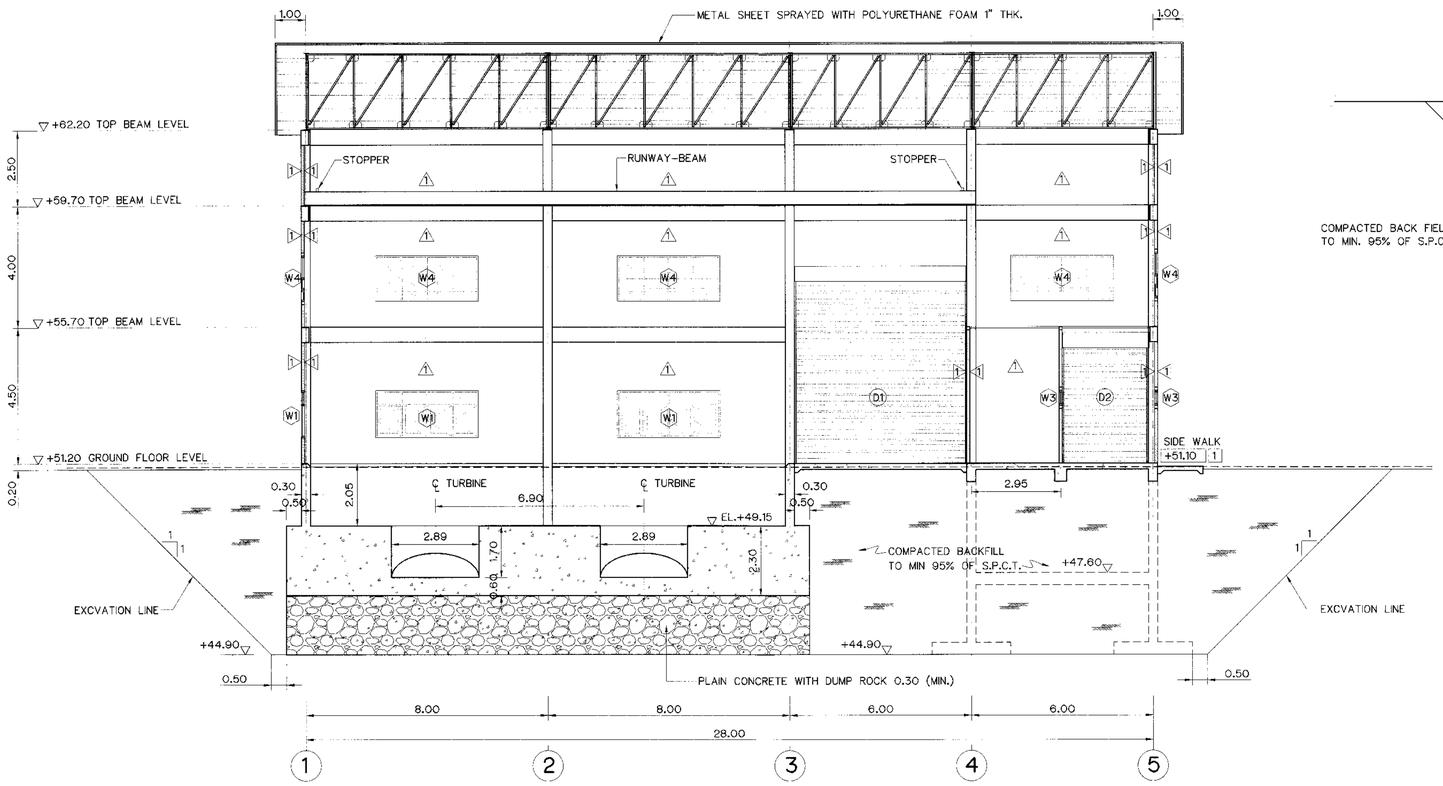

SECTION A–A
SCALE 1:100

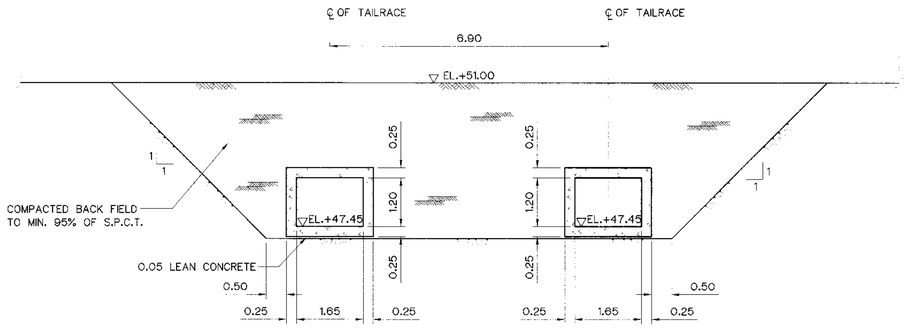

SECTION C–C
SCALE 1:75

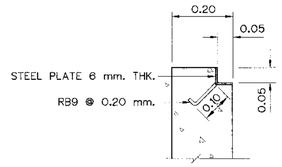

DETAIL "1"
SCALE 1:10

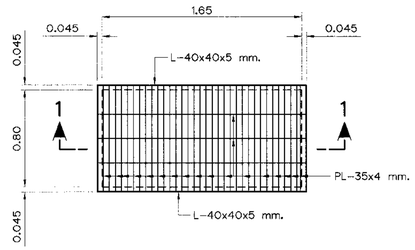

DETAIL OF STEEL GRATING COVER
SCALE 1:25

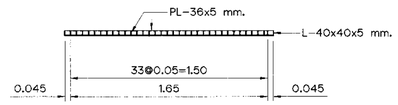

SECTION 1–1
SCALE 1:25

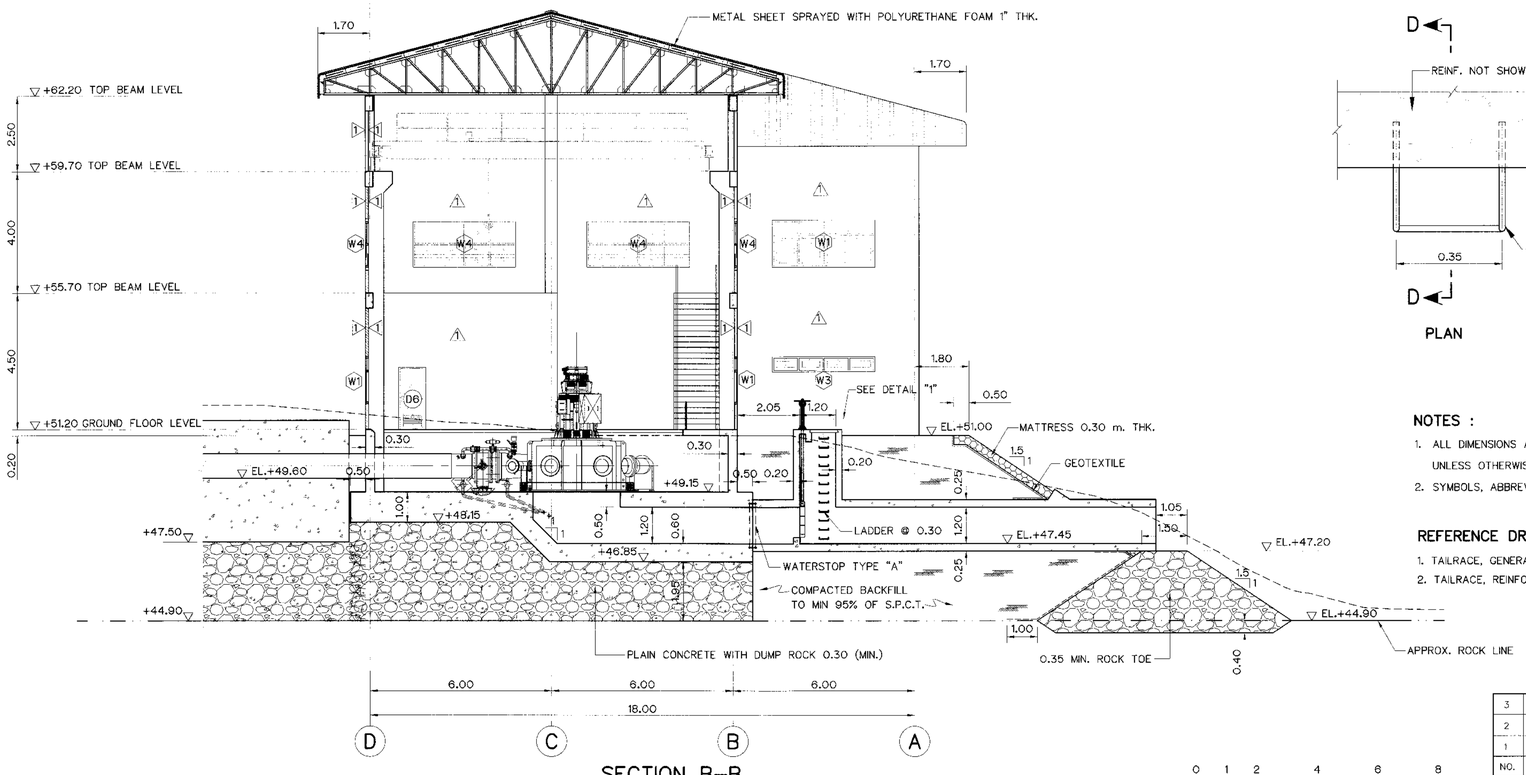

SECTION B–B
SCALE 1:100

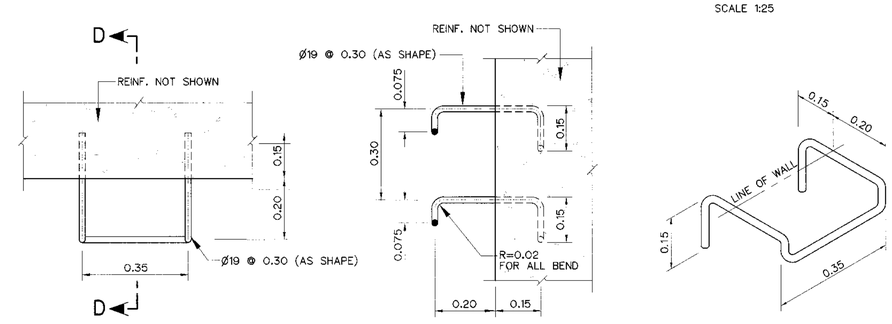

PLAN

SECTION D–D

ISOMETRIC VIEW

DETAIL OF LADDER RUNGS
NOT TO SCALE

SCALE 1:100 METERS

NOTES :

1. ALL DIMENSIONS AND ELEVATIONS (M.S.L.) ARE IN METERS, UNLESS OTHERWISE SHOWN.
2. SYMBOLS, ABBREVIATIONS AND GENERAL NOTES SEE DWG. NO. KLP-GN-03

REFERENCE DRAWINGS :

1. TAILRACE, GENERAL LAY-OUT — KLP-TR-01
2. TAILRACE, REINFORCEMENT DETAILS — KLP-TR-03

NO.	DATE	REVISIONS	CHECKED	APPROVED
3				
2				
1				

CONSULTANTS — DEDE

KINGDOM OF THAILAND
Department of Alternative Energy Development and Efficiency
MINISTRY OF ENERGY

KLONG LAM PLOK HYDROPOWER PROJECT

CIVIL WORKS AND TRANSMISSION LINE
TAILRACE
SECTIONS AND DETAILS

P&C MANAGEMENT CO.,LTD.

Department of Alternative Energy Development and Efficiency
MINISTRY OF ENERGY

DESIGNED — 28.29074 — 28.6226
DRAWN
CHECKED — 28.6226
PROJECT MANAGER — 08/03/2559 DATE

REVIEWED
SUBMITTED
RECOMMENDED
APPROVED

DRAWING NO. KLP-TR-02

SHEET NO. 98 OF 110

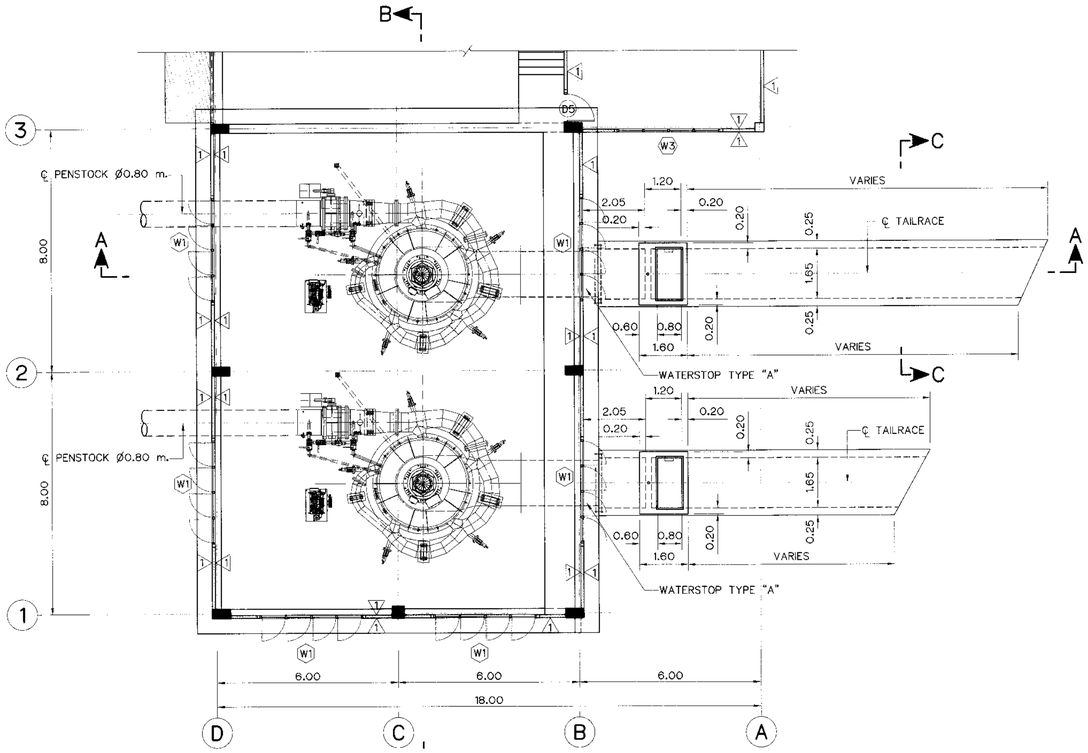

PLAN
SCALE 1:100

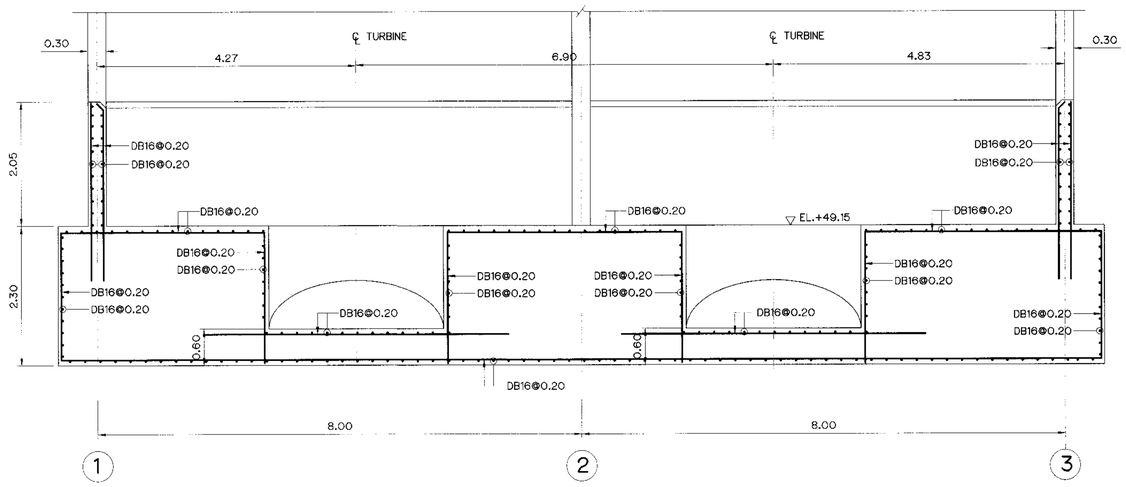

SECTION B–B
SCALE 1:50

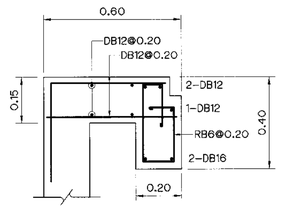

DETAIL "1"
NOT TO SCALE

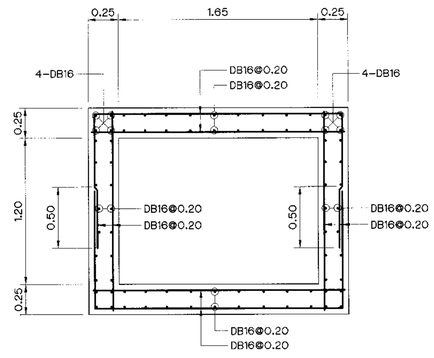

SECTION C–C
SCALE 1:25

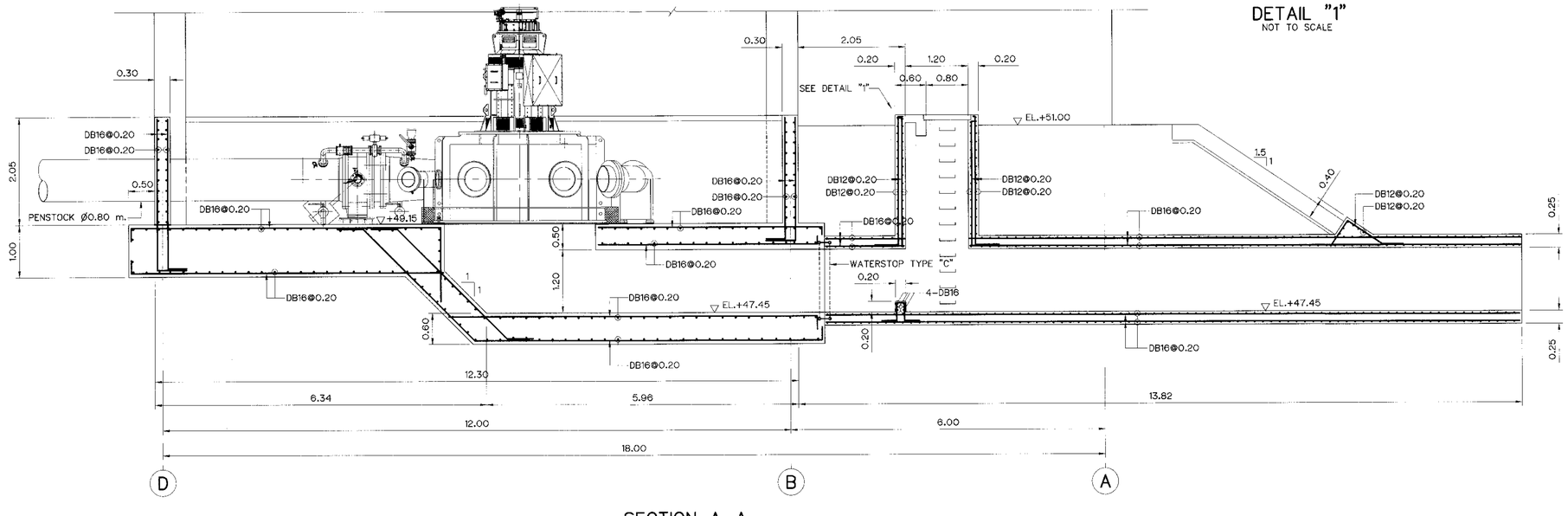

SECTION A–A
SCALE 1:50

NOTES :

1. ALL DIMENSIONS AND ELEVATIONS (M.S.L.) ARE IN METERS, UNLESS OTHERWISE SHOWN.
2. SYMBOLS, ABBREVIATIONS AND GENERAL NOTES SEE DWG. KLP-GN-03

REFERENCE DRAWINGS :

1. TAILRACE, GENERAL LAY-OUT — KLP-TR-01
2. TAILRACE, SECTIONS AND DETAILS — KLP-TR-02

SCALE 1:25 — 0 0.5 1 1.5 2 METERS

SCALE 1:50 — 0 0.5 1 2 3 4 METERS

SCALE 1:100 — 0 1 2 4 6 8 METERS

NO.	DATE	REVISIONS	CHECKED	APPROVED
3				
2				
1				
	CONSULTANTS		DEDE	

KINGDOM OF THAILAND
Department of Alternative Energy Development and Efficiency
MINISTRY OF ENERGY

KLONG LAM PLOK HYDROPOWER PROJECT

CIVIL WORKS AND TRANSMISSION LINE
TAILRACE
REINFORCEMENT DETAILS

P&C MANAGEMENT CO.,LTD.

DESIGNED — สมิ.29074 — สมิ.6226
DRAWN
CHECKED — สมิ.6226
PROJECT MANAGER — 08/03/2559 DATE

Department of Alternative Energy Development and Efficiency
MINISTRY OF ENERGY
REVIEWED
SUBMITTED
RECOMMENDED
APPROVED

DRAWING NO. KLP-TR-03
SHEET NO. 99 OF 110

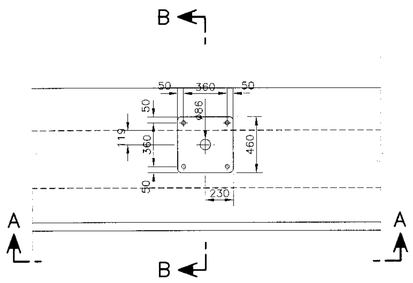

PLAN

SCALE 1:25

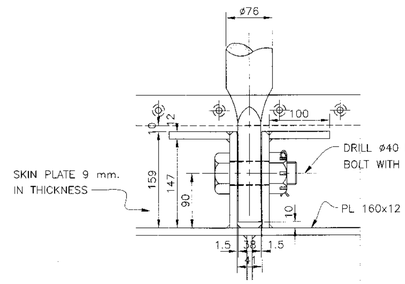

DETAIL "1"

SCALE 1:5

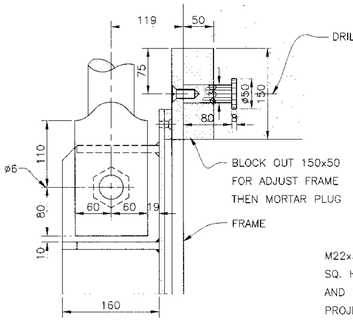

DETAIL "3"

SCALE 1:5

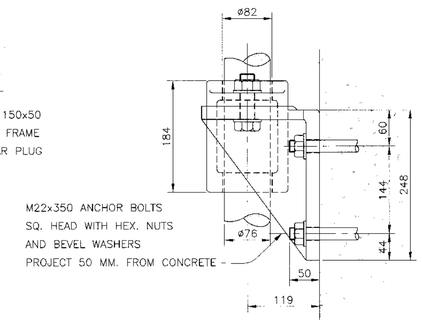

DETAIL "2"

SCALE 1:5

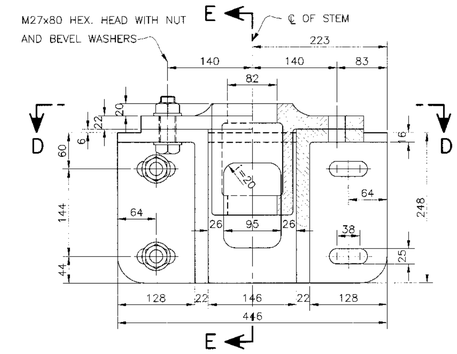

STEM GUIDE

SCALE 1:5

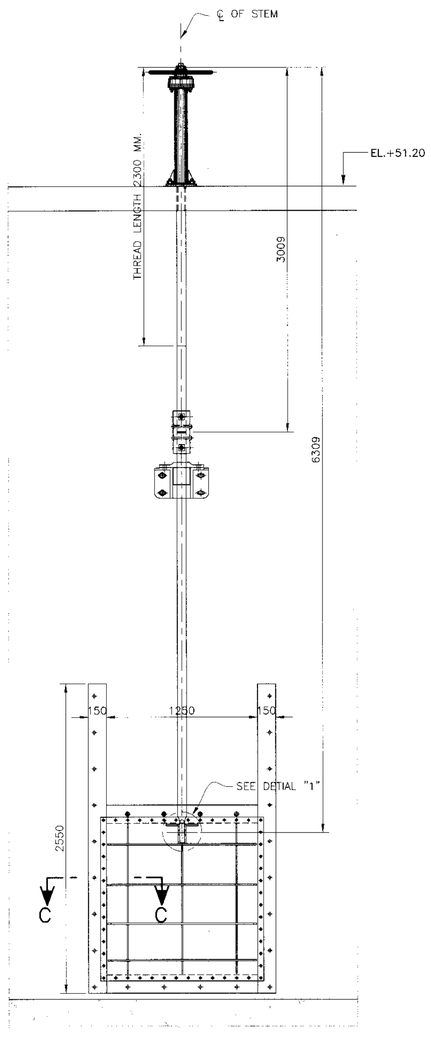

SECTION (A) – (A)

SCALE 1:25

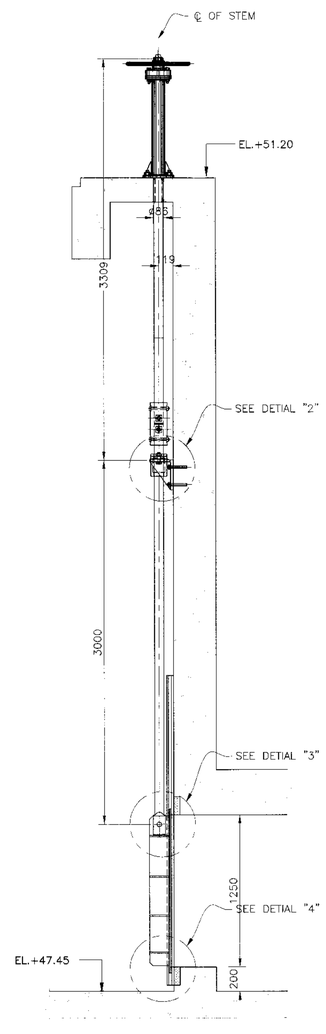

SECTION (B) – (B)

SCALE 1:25

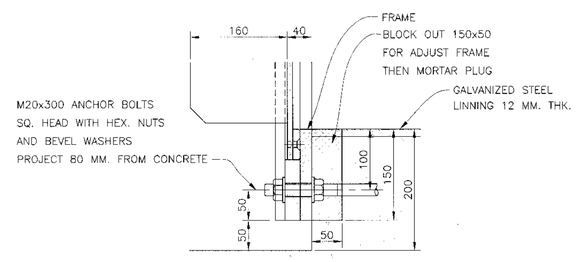

DETAIL "4"

SCALE "A"

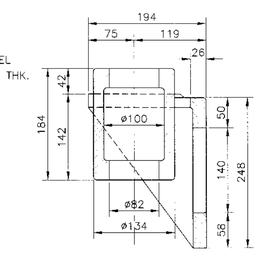

SECTION (E) – (E)

SCALE 1:5

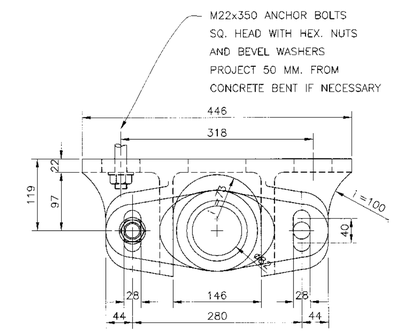

SECTION (D) – (D)

SCALE 1:5

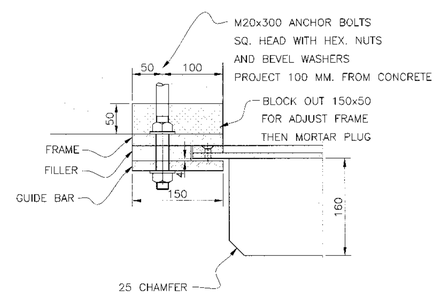

SECTION (C) – (C)

SCALE 1:5

NOTE :

1. ALL DIMENSIONS ARE IN MILLIMETERS, UNLESS OTHERWISE SHOWN.
2. ALL WELDING WILL BE 6 MILLIMETERS, UNLESS OTHERWISE SHOWN.
3. ALL BOLTS AND NUTS USE ASTM A325
4. ALL STRUCTURAL STEELS ARE JIS G 3101 SS400
5. ALL STAINLESS STEELS PLATES ARE JIS G 4304 SUS 304

REFERENCE DWGS :

1. TAILRACE SECTION AND DETAILS	KLP–TR–02
2. TAILRACE 1.25x1.25 m. VERTICAL GATE GATE DETAIL	KLP–TR–05
3. WEIR INTAKE STRUCTURE GATE–LIFT PEDESTALS	KLP–WE–13
4. WEIR VERTICAL SCREW–LIFT CAPACITY 2,250 KG.	KLP–WE–14

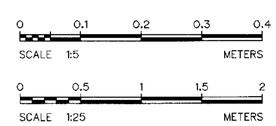

NO.	DATE	REVISIONS	CHECKED	APPROVED
3				
2				
1				

CONSULTANTS — DEDE

KINGDOM OF THAILAND
Department of Alternative Energy Development and Efficiency
MINISTRY OF ENERGY

KLONG LAM PLOK HYDROPOWER PROJECT

CIVIL WORKS AND TRANSMISSION LINE

TAILRACE

1.25x1.25 m. VERTICAL GATE GATE INSTALLATION

P&C MANAGEMENT CO.,LTD.

Department of Alternative Energy Development and Efficiency
MINISTRY OF ENERGY

DESIGNED	ส.ต.ท.29074	REVIEWED	
DRAWN		SUBMITTED	
CHECKED	ส.ต.ท.6226	RECOMMENDED	
PROJECT MANAGER	08/03/2559 DATE	APPROVED	
DRAWING NO.	KLP–TR–04	SHEET NO.	100 OF 110

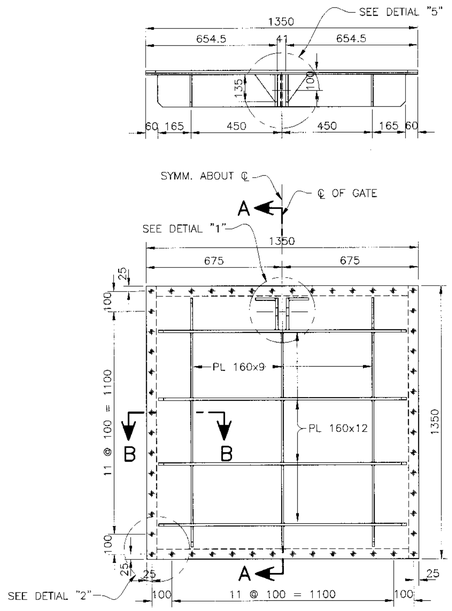

GATE LEAF

SCALE 1:15

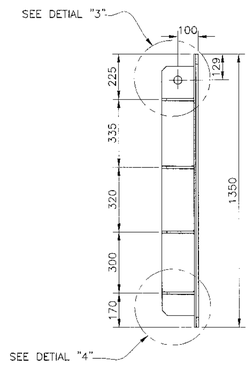

SECTION (A) – (A)

SCALE 1:15

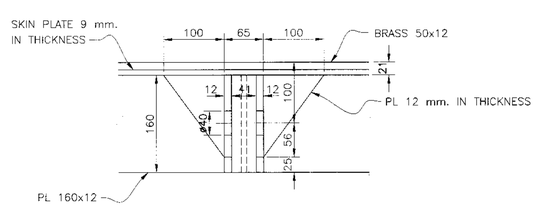

DETAIL "5"

SCALE 1:5

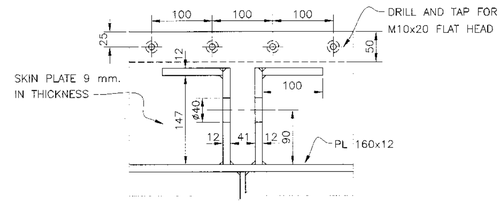

DETAIL "1"

SCALE 1:5

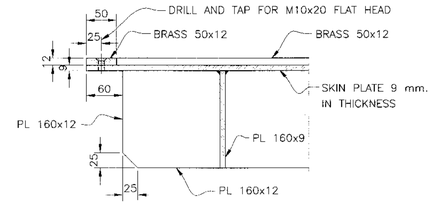

SECTION (B) – (B)

SCALE 1:5

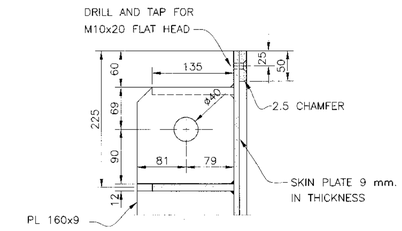

DETAIL "3"

SCALE 1:5

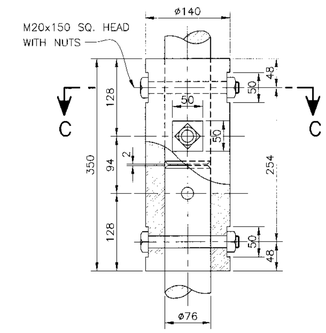

COUPPING

SCALE 1:5

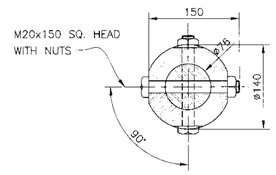

SECTION (C) – (C)

SCALE 1:5

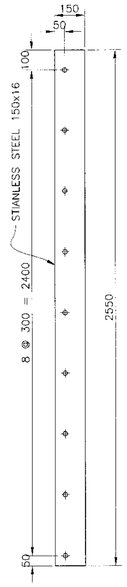

GUIDE BAR

SCALE "B"

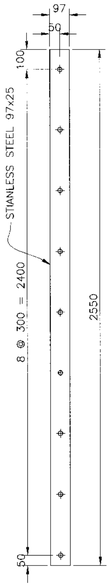

FILLER

SCALE 1:15

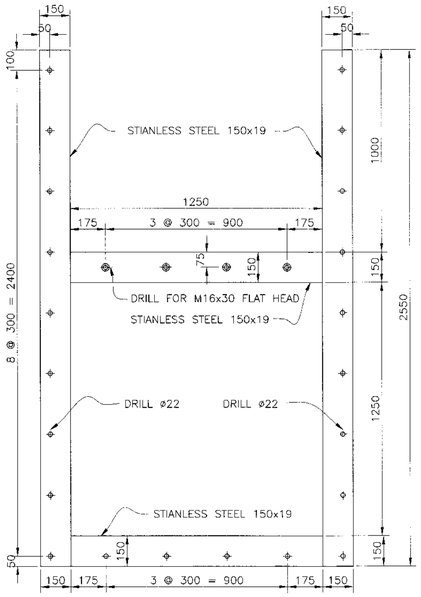

FRAME

SCALE 1:15

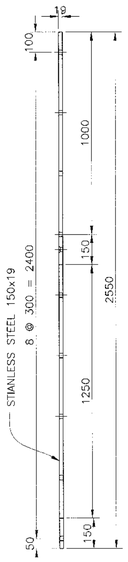

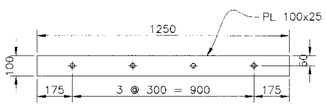

BOTTOM BAR

SCALE 1:15

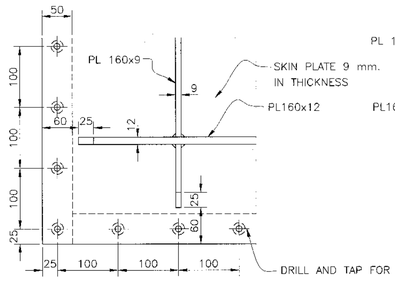

DETAIL "2"

SCALE 1:5

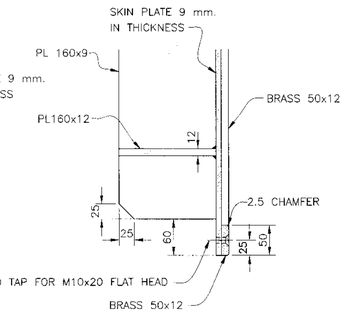

DETAIL "4"

SCALE 1:5

NOTE :

1. ALL DIMENSIONS ARE IN MILLIMETERS, UNLESS OTHERWISE SHOWN.
2. ALL WELDING WILL BE 6 MILLIMETERS, UNLESS OTHERWISE SHOWN.
3. ALL BOLTS AND NUTS USE ASTM A325
4. ALL STRUCTURAL STEELS ARE JIS G 3101 SS400
5. ALL STAINLESS STEELS PLATES ARE JIS G 4304 SUS 304

REFERENCE DWGS :

1. TAILRACE SECTION AND DETAIL KLP–TR–02
2. TAILRACE 1.25x1.25 m. VERTICAL GATE INSTALLATION KLP–TR–04

0 0.1 0.2 0.3 0.4
SCALE 1:5 METERS

0 0.1 0.2 0.4 0.6 0.8 1.0 1.2
SCALE 1:15 METERS

NO.	DATE	REVISIONS	CHECKED	APPROVED
3				
2				
1				
	CONSULTANTS		DEDE	

KINGDOM OF THAILAND
Department of Alternative Energy Development and Efficiency
MINISTRY OF ENERGY

KLONG LAM PLOK HYDROPOWER PROJECT

CIVIL WORKS AND TRANSMISSION LINE

TAILRACE

1.25x1.25 m. VERTICAL GATE GATE DETAIL

P&C MANAGEMENT CO.,LTD.

Department of Alternative Energy Development and Efficiency
MINISTRY OF ENERGY

DESIGNED สพ.29074 สน.6226
DRAWN
CHECKED สน.6226
PROJECT MANAGER 08/03/2559 DATE

REVIEWED
SUBMITTED
RECOMMENDED
APPROVED

DRAWING NO. KLP–TR–05

SHEET NO. 101 OF 110